THIS DRAWING AND SPECIFICATIONS,HEREIN,ARE THE PROPERTY OF INVENTEC CORPORATION AND SHALL NOT BE REPODUCED,COPIED,OR USED IN WHOLE OR IN PART AS THE BASIS FOR THE MANUFACTURE OR SALE OF ITEMS WITHOUT WRITTEN PERMISSION,INVENTEC CORPORATION, 2012 ALL RIGHT RESERVED.

HSF Property:ROHS or Halogen-Free

COMET DIS

SI1 BUILD

2012.11.30

DATE	CHANGE NO.	REV
21-OCT-2002		

	EE	DATE	POWER	DATE
DRAWER	EDI CHEN	2012/10/24	IRAY CHEN	2012/10/24
DESIGN	EDI CHEN	2012/10/24	IRAY CHEN	2012/10/24
CHECK	EDI CHEN	2012/10/24	IRAY CHEN	2012/10/24
RESPONSIBLE	EDI CHEN	2012/10/24	IRAY CHEN	2012/10/24

SIZE= A3 VER: X01

FILE NAME: COMET DIS

P/N: 6050A2508101 XXX

INVENTEC

TITLE MODEL,PROJECT,FUNCTION
COMET

SIZE	CODE	DOC.NUMBER	REV
C	CS	I1310xxxxx-D-0	X01

SHEET 1 of 72

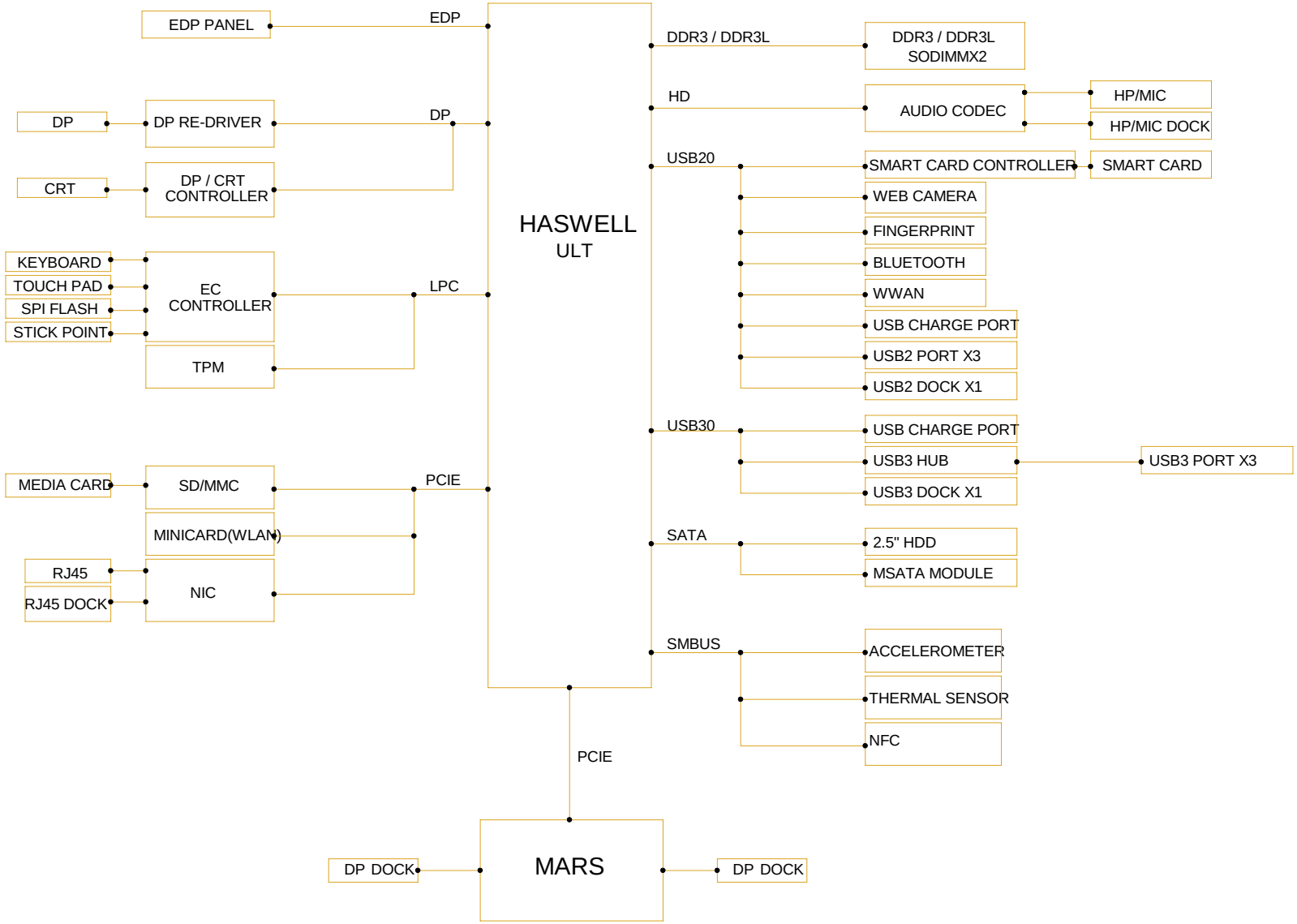

INVENTEC

TITLE MODEL,PROJECT,FUNCTION
Block Diagram

SIZE	CODE	DOC.NUMBER	REV
C	CS	1310xxxxx-0-0	X01

CHANGE by XXX DATE 21-OCT-2002 SHEET 2 of 72

www.indiafix.in

TABLE OF CONTENTS

01.PROJECT NAME
02.BLOCK DIAGRAM
03.TABLE OF CONTENTS
04.POWER BLOCK DIAGRAM
05.SYSTEM POWER(CHARGER)
06.SYSTEM POWER(BATT SELECTOR)
07.SYSTEM POWER(OCP)
08.SYSTEM POWER(P3V3A&P5V0A)
09.P3V3A&P5V0A_CHG PORT
10.SYSTEM POWER(P1V5)
11.SYSTEM POWER(P1V05_M)
12.SYSTEM POWER(P1V05S)
13.USB HUB POWER (P1V2A)
14.SYSTEM POWER(PVCORE&PVAXG-1)
15.SYSTEM POWER(PVCORE&PVAXG-2)
16.POWER SEQUENCE (SLEEP)
17.DC JACK & BATTERT CONN.
18.HP_OCP
19.PVCORE_DGPU
20.PVDDCI
21.P1V35S_DGPU
22.P1V8S
23.PVPCIE
24.POWER (SEQUENCE)
25.FAN & THERMAL
26.XDP & ME CONN.
27.HASWELL_1 (MISC,JTAG)
28.HASWELL_2 (LPC,SPI,SMBUS,CLINK,PM)
29.HASWELL_3 (GPIO)
30.HASWELL_4 (DP,EDP)
31.HASWELL_5 (DDR)
32.HASWELL_6 (PCIE,USB)
33.HASWELL_7 (RTC,AUDIO,SATA,JTAG)
34.HASWELL_8 (CLK)
35.HASWELL_9 (POWER)
36.HASWELL_10 (POWER)
37.HASWELL_11 (GND)
38.SYSTEM MEMORY (DIMM0)
39.SYSTEM MEMORY (DIMM1)
40.EMPTY
41.EMPTY
42.DP TO VGA CONVERTER
43.DISPLAY PORT
44.LCM & WEBCAM CONN
45.SATA HDD, MSATA
46.USB HUB
47.USB3 PORTS
48.USB & CRT DB
49.FINGERPRINT READER, NFC
50.ACCELEMETER
51.KBC, SPI
52.KEYBOARD
53.TPM
54.LAN
55.WLAN/BT SLOT
56.WWAN SLOT, SIM SLOT
57.DOCKING
58.B TO B CONN, POINT STICK CONN
59.AUDIO CODEC
60.AUDIO JACK, MIC AMP.
61.CARD READER
62.BUTTON, LED
63.SMART CARD DAUGHTER BOARD
64.CRT DB WTB CONN
65.MIC DB
66.SCREW
67.EMPTY
68.MARS-1
69.MARS-2
70.MARS-3
71.MARS-4
72.MARS-5
73.MARS-6
74.MARS-7
75.MARS-8
76.VRAM-1
77.VRAM-2

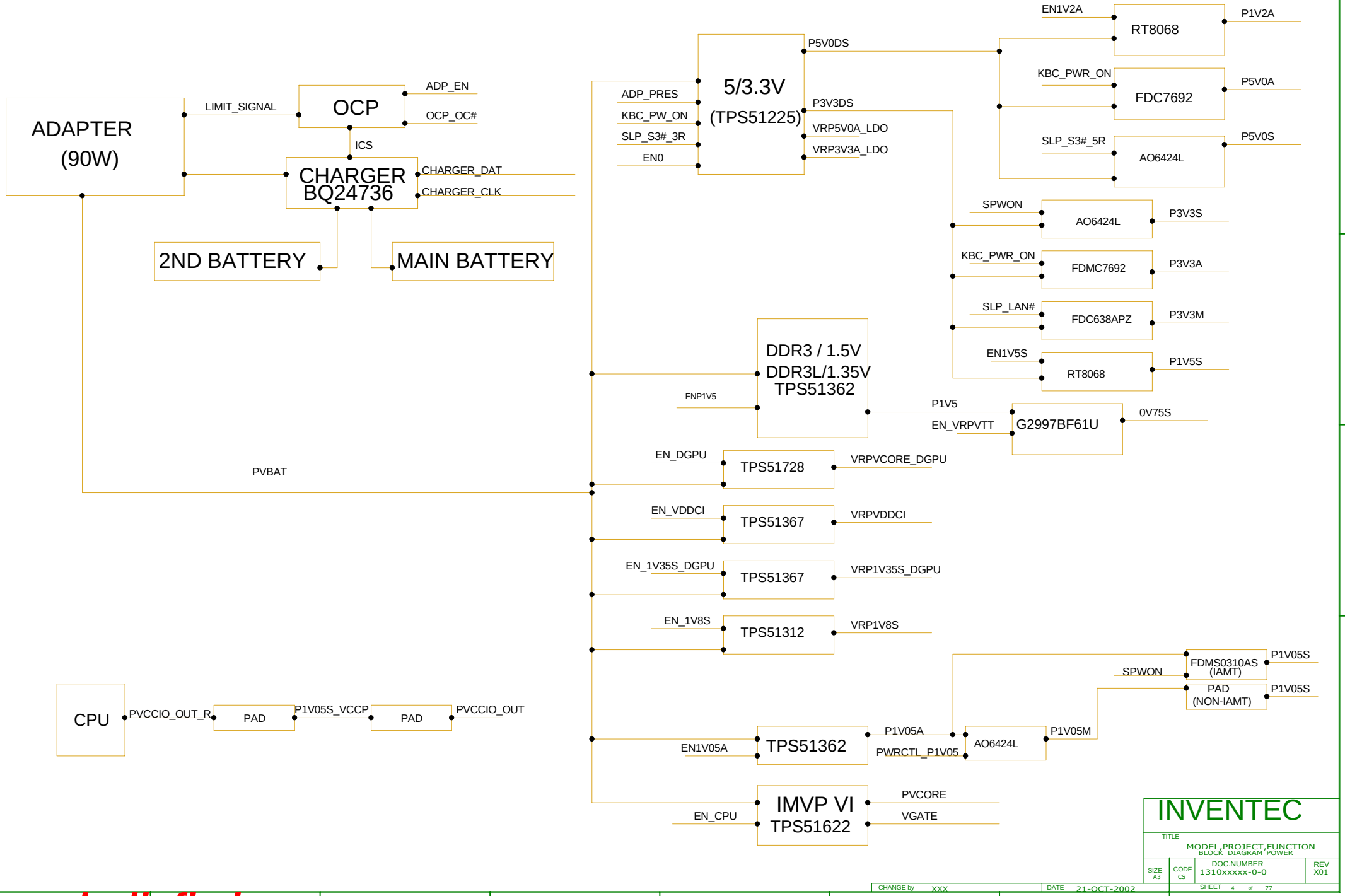

www.indiafix.in

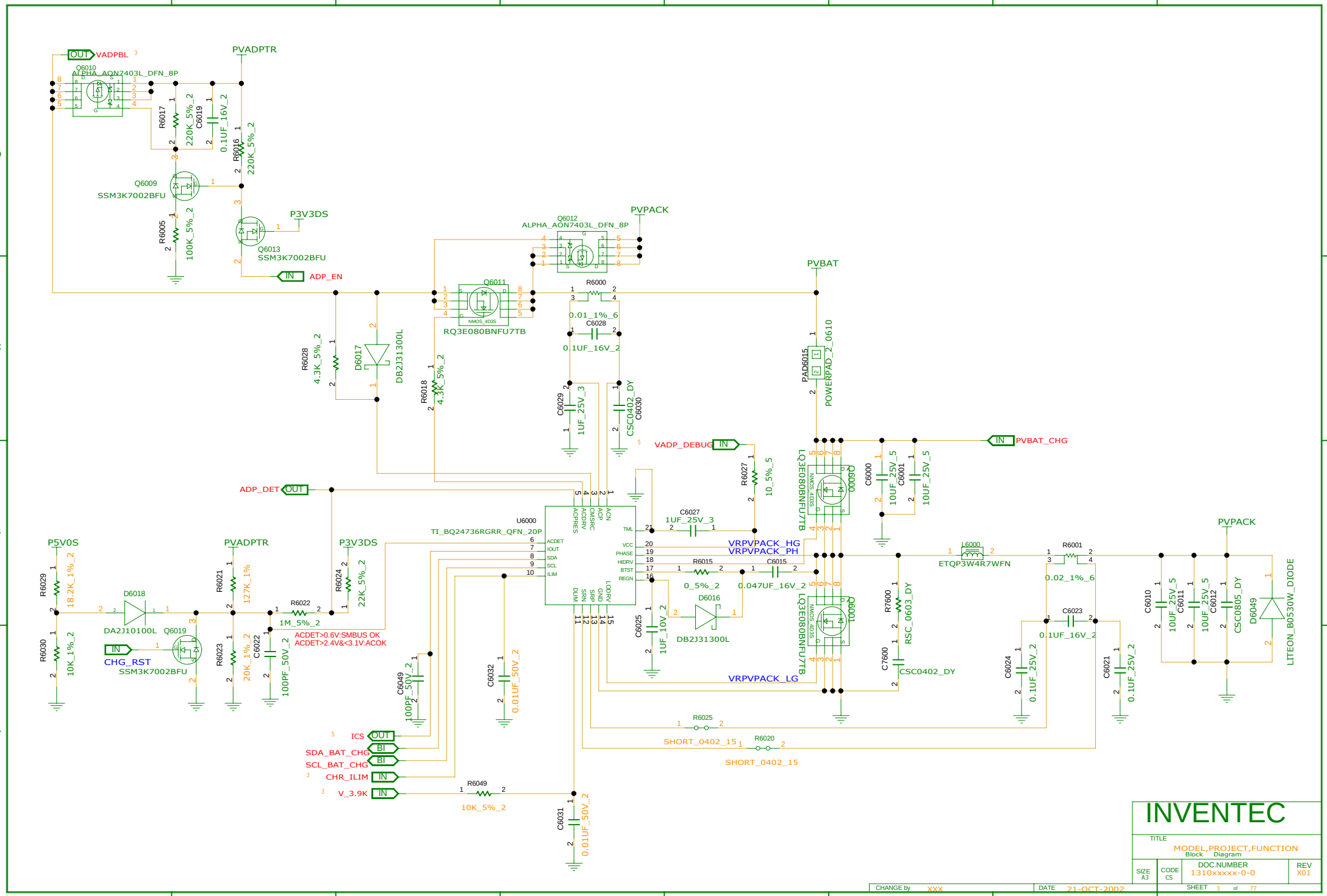
VADPBL
PVADPTR
Q6010
ALPHA_AON7403L_DFN_8P
R6017
220K_5%_2
C6019
0.1UF_16V_2
R6016
220K_5%_2
Q6009
SSM3K7002BFU
R6005
100K_5%_2
P3V3DS
Q6013
SSM3K7002BFU
ADP_EN
PVPACK
Q6012
ALPHA_AON7403L_DFN_8P
Q6011
RQ3E080BNFU7TB
R6000
0.01_1%_6
C6028
0.1UF_16V_2
PVBAT
R6028
4.3K_5%_2
D6017
DB2J31300L
R6018
4.3K_5%_2
C6029
1UF_25V_3
C6030
CSC0402_DY
PAD6015
POWERPAD_2_0610
VADP_DEBUG
R6027
10_5%_5
PVBAT_CHG
Q6000
LQ3E080BNFU7TB
C6000
10UF_25V_5
C6001
10UF_25V_5
ADP_DET
U6000
TI_BQ24736RGRR_QFN_20P
C6027
1UF_25V_3
VRPVPACK_HG
VRPVPACK_PH
R6015
0_5%_2
C6015
0.047UF_16V_2
D6016
DB2J31300L
C6025
1UF_10V_2
Q6001
LQ3E080BNFU7TB
VRPVPACK_LG
L6000
ETQP3W4R7WFN
R6001
0.02_1%_6
C6023
0.1UF_16V_2
R7600
RSC_0603_DY
C7600
CSC0402_DY
C6024
0.1UF_25V_2
C6021
0.1UF_25V_2
C6010
10UF_25V_5
C6011
10UF_25V_5
C6012
CSC0805_DY
D6049
LITEON_B0530W_DIODE
P5V0S
R6029
18.2K_1%_2
D6018
DA2J10100L
R6030
10K_1%_2
CHG_RST
Q6019
SSM3K7002BFU
R6021
127K_1%
R6023
20K_1%_2
C6022
100PF_50V_2
R6022
1M_5%_2
R6024
22K_5%_2
ACDET>0.6V:SMBUS OK
ACDET>2.4V&<3.1V:ACOK
C6049
100PF_50V_2
C6032
0.01UF_50V_2
ICS
SDA_BAT_CHG
SCL_BAT_CHG
CHR_ILIM
V_3.9K
R6049
10K_5%_2
C6031
0.01UF_50V_2
R6025
SHORT_0402_15
R6020
SHORT_0402_15
INVENTEC
TITLE
MODEL,PROJECT,FUNCTION
Block Diagram
SIZE A3
CODE CS
DOC.NUMBER 1310xxxxx-0-0
REV X01
CHANGE by XXX
DATE 21-OCT-2002
SHEET 5 of 77

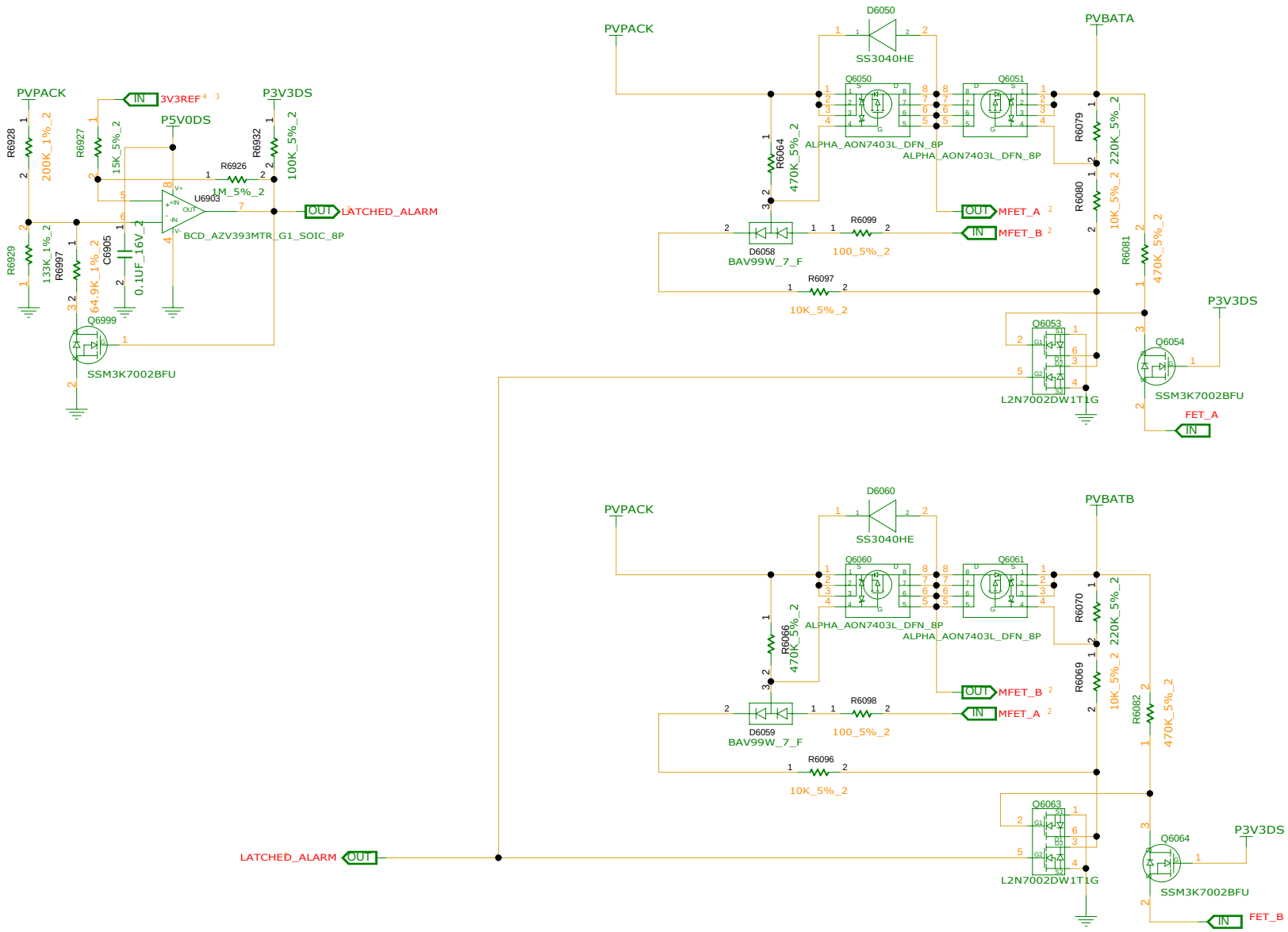

INVENTEC

TITLE: MODEL,PROJECT,FUNCTION Block Diagram

SIZE	CODE	DOC.NUMBER	REV
A3	CS	1310xxxxx-0-0	X01

CHANGE by XXX DATE 21-OCT-2002 SHEET 6 of 77

www.indiafix.in

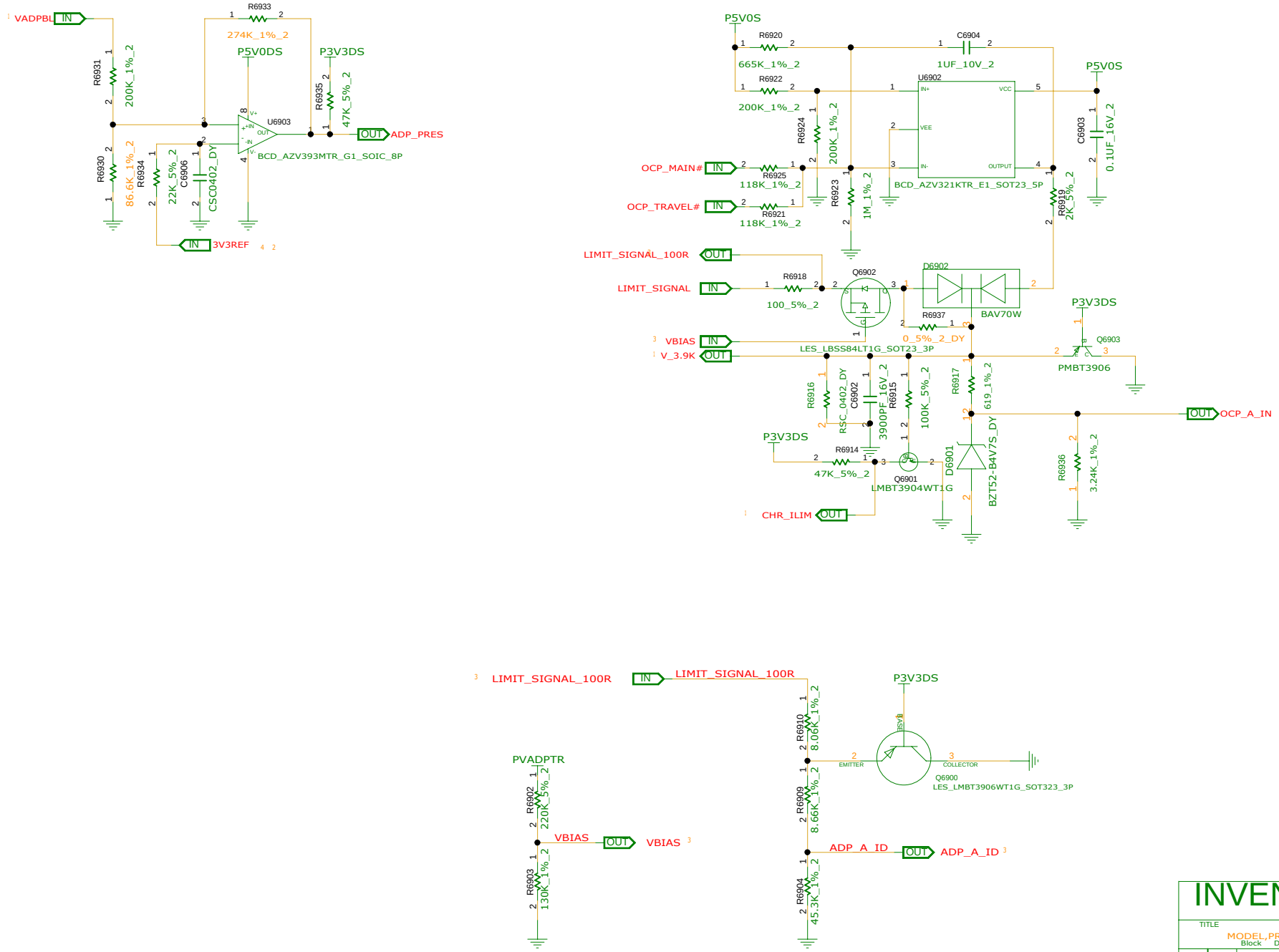

INVENTEC

TITLE
MODEL,PROJECT,FUNCTION
Block Diagram

SIZE	CODE	DOC.NUMBER	REV
A3	CS	1310xxxxx-0-0	X01

CHANGE by XXX DATE 21-OCT-2002 SHEET 7 of 77

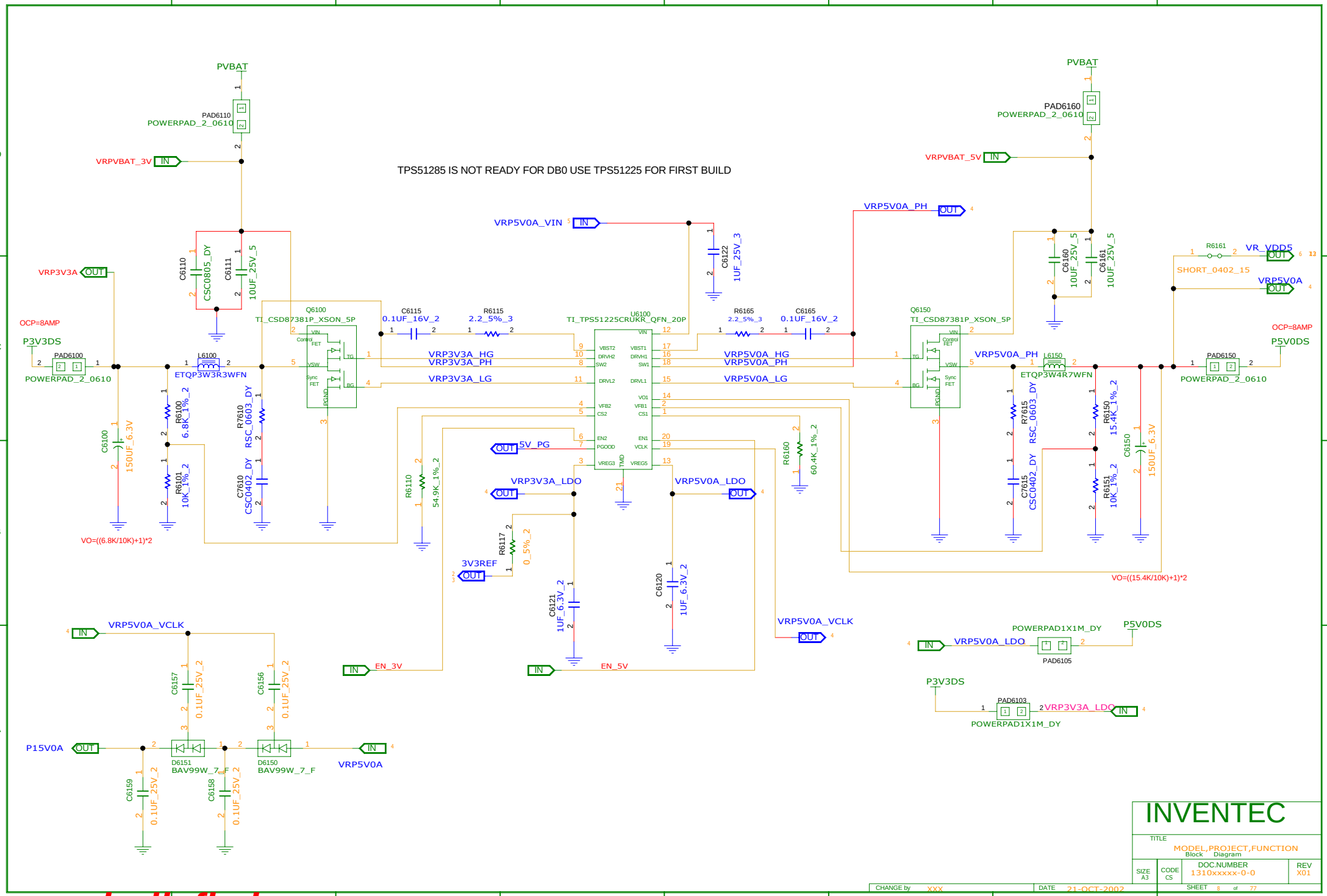

www.indiafix.in

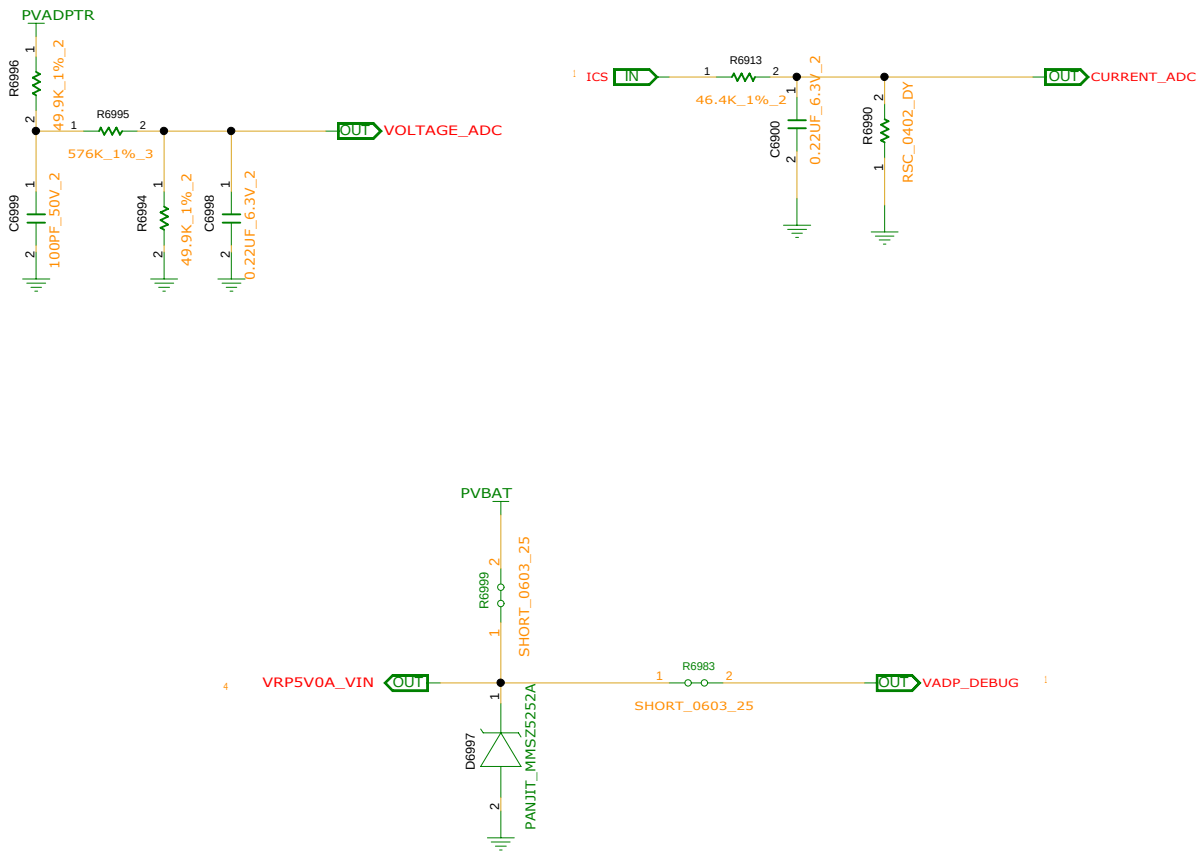

INVENTEC

TITLE
MODEL,PROJECT,FUNCTION
Block Diagram

SIZE	CODE	DOC.NUMBER	REV
A3	CS	1310xxxxx-0-0	X01

CHANGE by XXX DATE 21-OCT-2002 SHEET 9 of 77

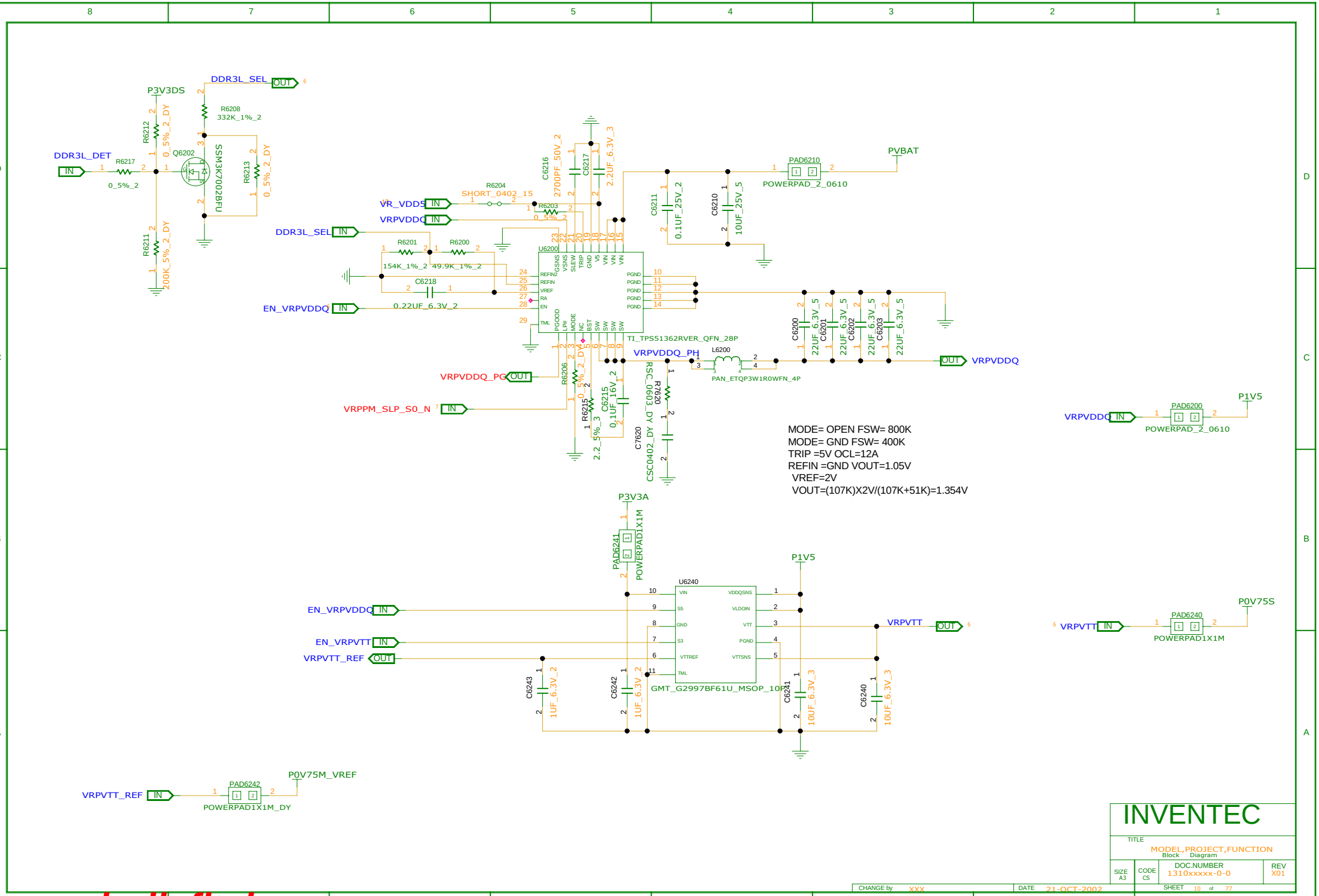

www.indiafix.in

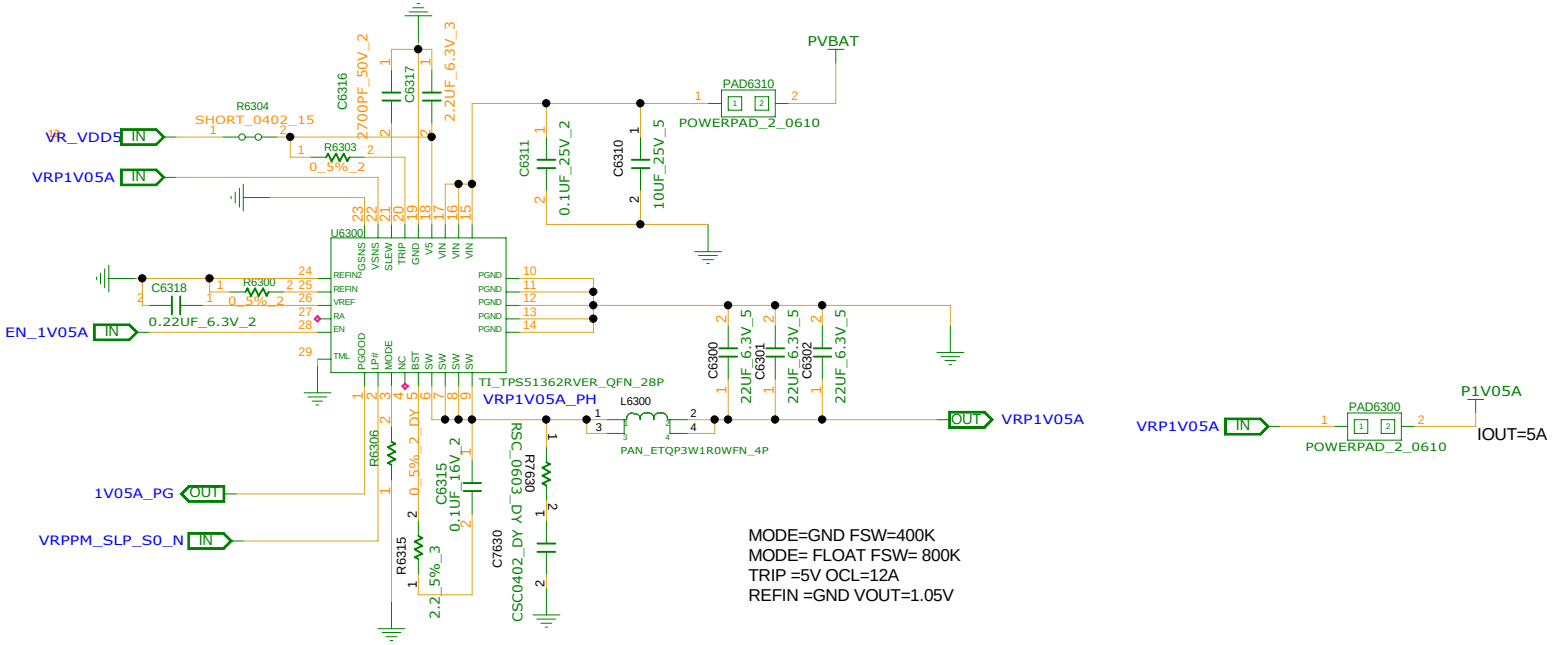

INVENTEC

TITLE
MODEL,PROJECT,FUNCTION
Block Diagram

SIZE	CODE	DOC.NUMBER	REV
A3	CS	1310xxxxx-0-0	X01

CHANGE by XXX DATE 21-OCT-2002 SHEET 11 of 77

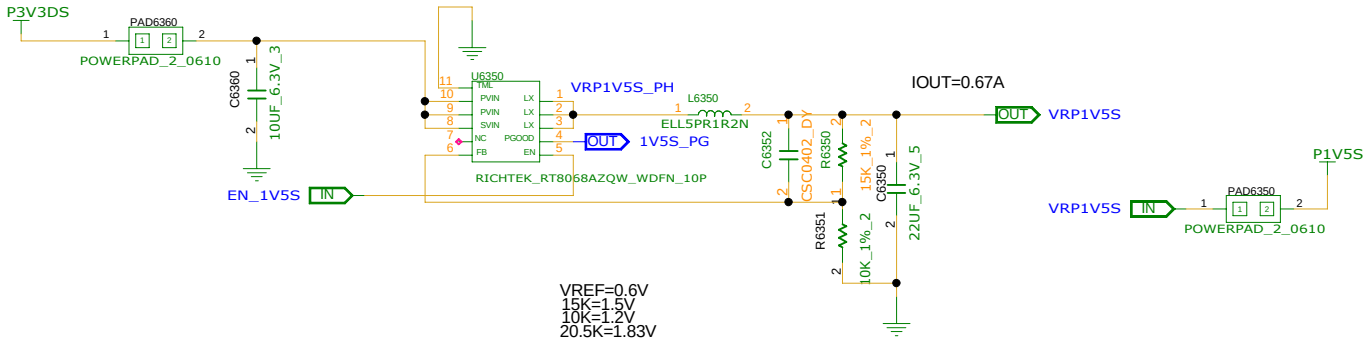

INVENTEC

TITLE
MODEL,PROJECT,FUNCTION
Block Diagram

SIZE	CODE	DOC.NUMBER	REV
A3	CS	1310xxxxx-0-0	X01

CHANGE by XXX DATE 21-OCT-2002 SHEET 12 of 77

www.indiafix.in

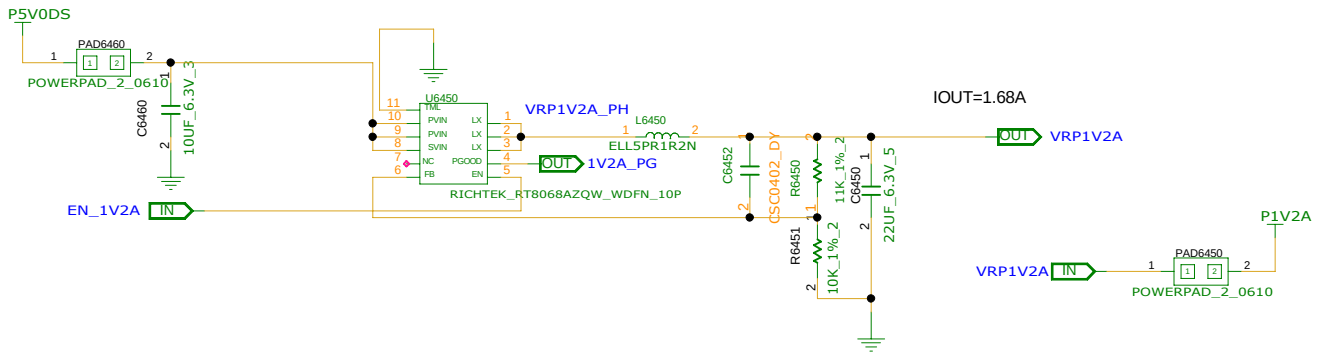

VREF=0.6V
15K=1.5V
10K=1.2V
11K=1.25V
20.5K=1.83V

MODE= FLOAT=SKIP MODE
MODE=VIN=FCCM MODE

INVENTEC

TITLE
MODEL,PROJECT,FUNCTION
Block Diagram

SIZE	CODE	DOC.NUMBER	REV
A3	CS	1310xxxxx-0-0	X01

CHANGE by XXX DATE 21-OCT-2002 SHEET 13 of 77

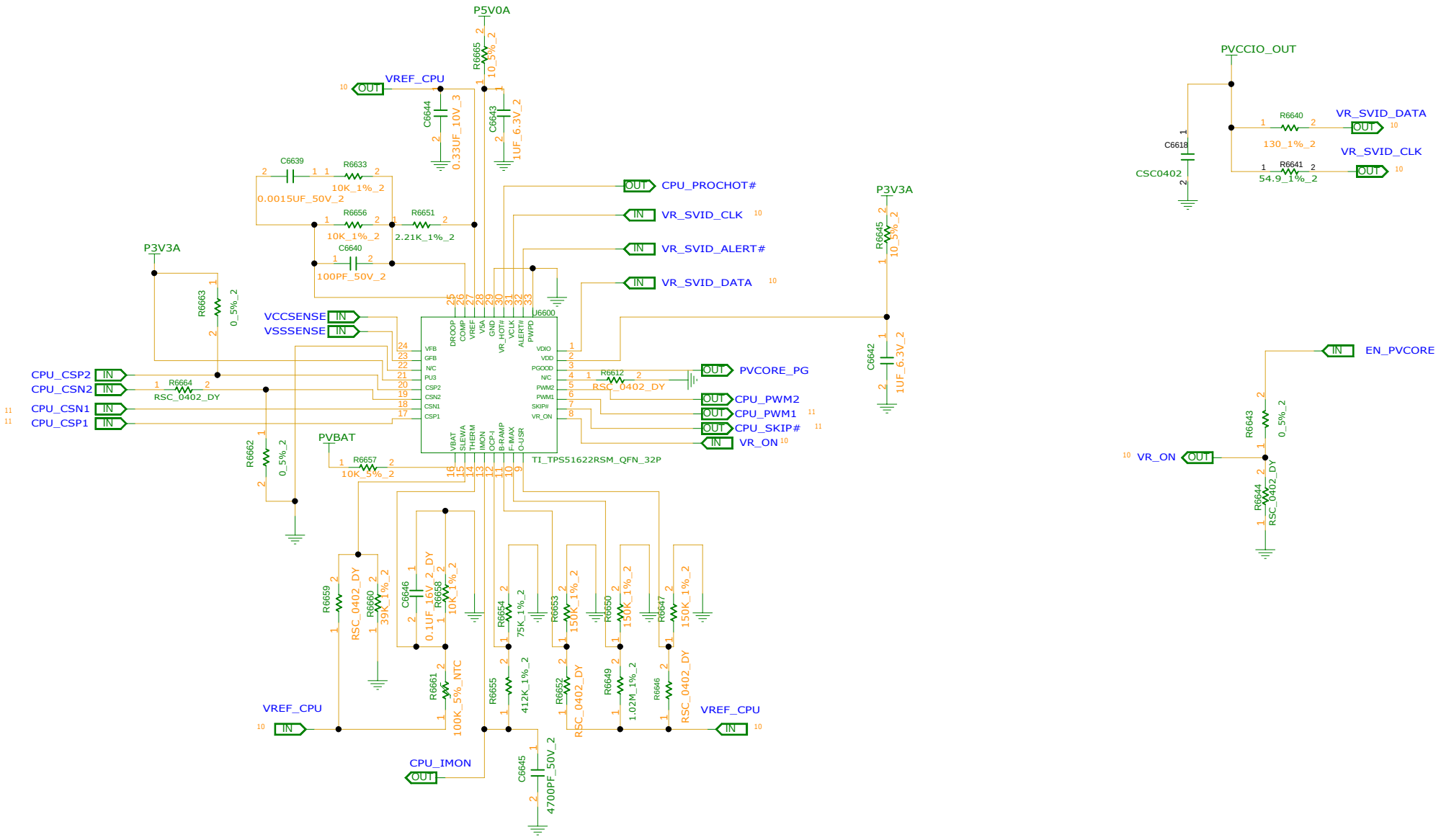

INVENTEC

TITLE
MODEL,PROJECT,FUNCTION
Block Diagram

SIZE	CODE	DOC.NUMBER	REV
A3	CS	1310xxxxx-0-0	X01

CHANGE by XXX DATE 21-OCT-2002 SHEET 14 of 77

www.indiafix.in

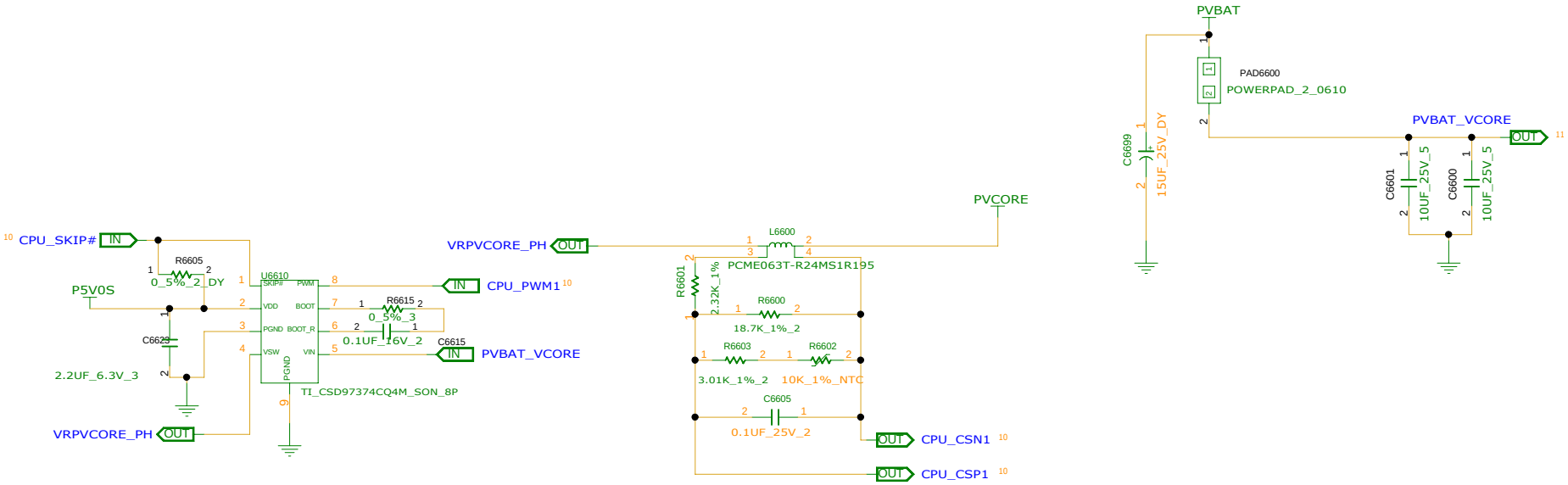

INVENTEC

TITLE
MODEL,PROJECT,FUNCTION
Block Diagram

SIZE	CODE	DOC.NUMBER	REV
A3	CS	1310xxxxx-0-0	X01

CHANGE by XXX DATE 21-OCT-2002 SHEET 15 of 77

REFERENCE NUMER : 7000~7350

	PAD2990	Q7151	Q7150	Q7152	R7150	R7151	R7154
NON-IAMT	INSTALL	UN-INSTALL	UN-INSTALL	UN-INSTALL	UN-INSTALL	UN-INSTALL	UN-INSTALL
IAMT	UN-INSTALL	INSTALL	INSTALL	INSTALL	INSTALL	INSTALL	INSTALL

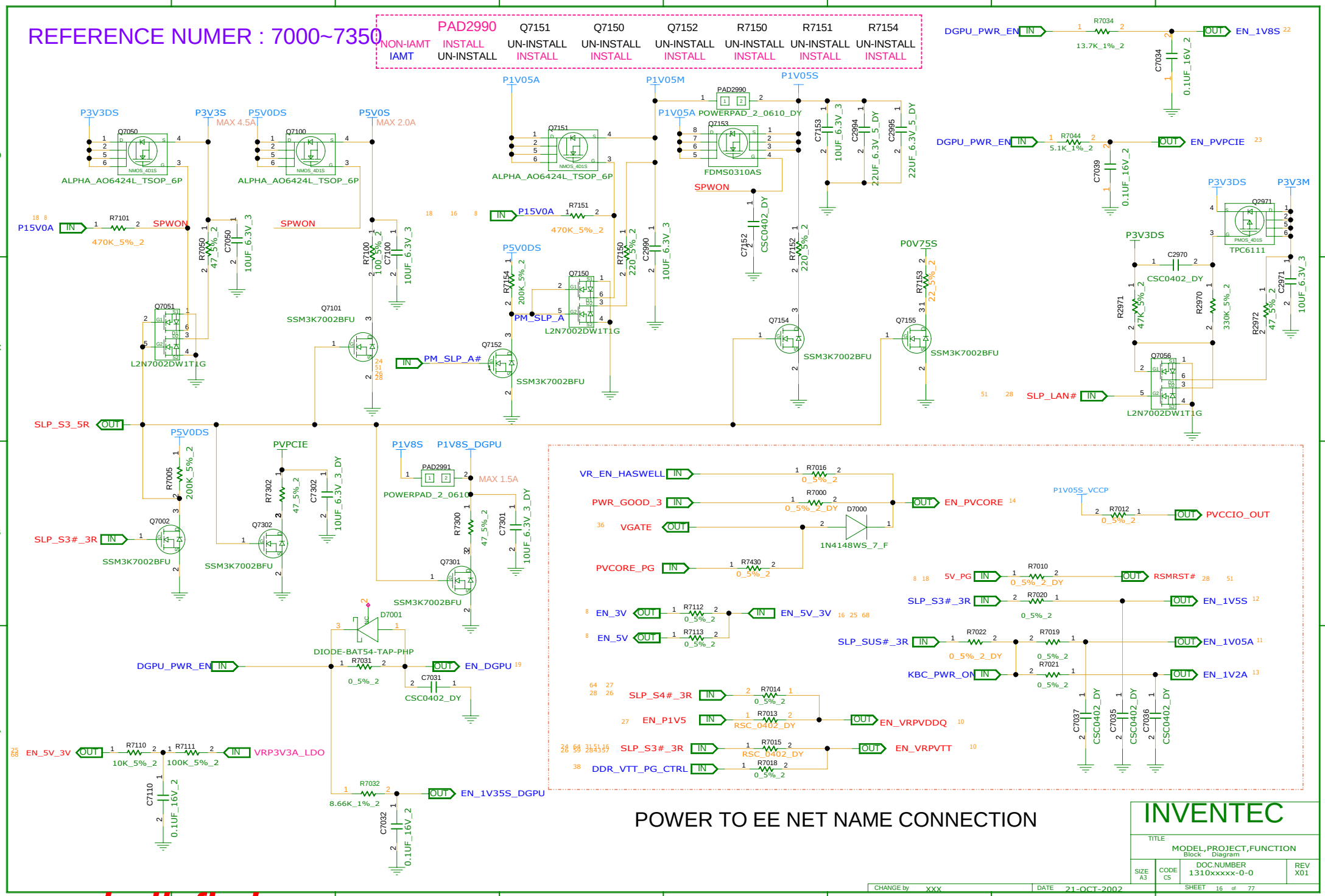

POWER TO EE NET NAME CONNECTION

INVENTEC

TITLE: MODEL,PROJECT,FUNCTION Block Diagram

SIZE	CODE	DOC.NUMBER	REV
A3	CS	1310xxxxx-0-0	X01

CHANGE by XXX DATE 21-OCT-2002 SHEET 16 of 77

www.indiafix.in

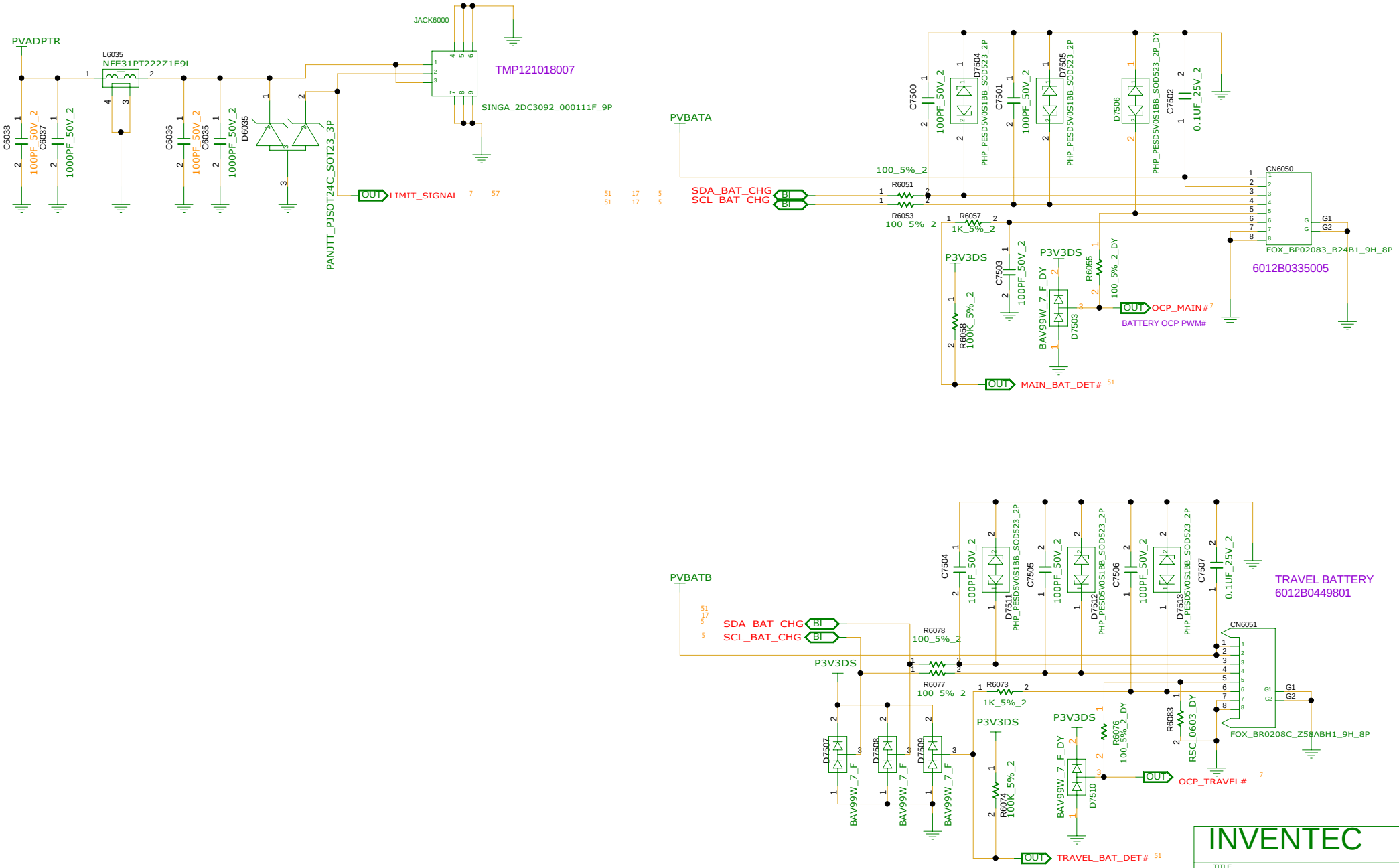
PVADPTR
L6035
NFE31PT222Z1E9L
C6038
C6037
C6036
C6035
100PF_50V_2
1000PF_50V_2
D6035
PANJTT_PJSOT24C_SOT23_3P
JACK6000
TMP121018007
SINGA_2DC3092_000111F_9P
OUT LIMIT_SIGNAL
PVBATA
SDA_BAT_CHG
SCL_BAT_CHG
BI
R6051
R6053
100_5%_2
R6057
1K_5%_2
C7500
C7501
C7502
C7503
D7504
D7505
D7506
PHP_PESD5V0S1BB_SOD523_2P
0.1UF_25V_2
P3V3DS
R6058
100K_5%_2
BAV99W_7_F_DY
D7503
R6055
OUT OCP_MAIN#
BATTERY OCP PWM#
OUT MAIN_BAT_DET#
CN6050
FOX_BP02083_B24B1_9H_8P
6012B0335005
G1
G2
PVBATB
C7504
C7505
C7506
C7507
D7511
D7512
D7513
R6078
R6077
R6073
1K_5%_2
D7507
D7508
D7509
BAV99W_7_F
R6074
100K_5%_2
R6076
R6083
RSC_0603_DY
D7510
OUT OCP_TRAVEL#
OUT TRAVEL_BAT_DET#
CN6051
FOX_BR0208C_Z58ABH1_9H_8P
TRAVEL BATTERY
6012B0449801
INVENTEC
TITLE
MODEL,PROJECT,FUNCTION
Block Diagram
SIZE A3
CODE CS
DOC.NUMBER 1310xxxxx-0-0
REV X01
CHANGE by XXX
DATE 21-OCT-2002
SHEET 17 of 77

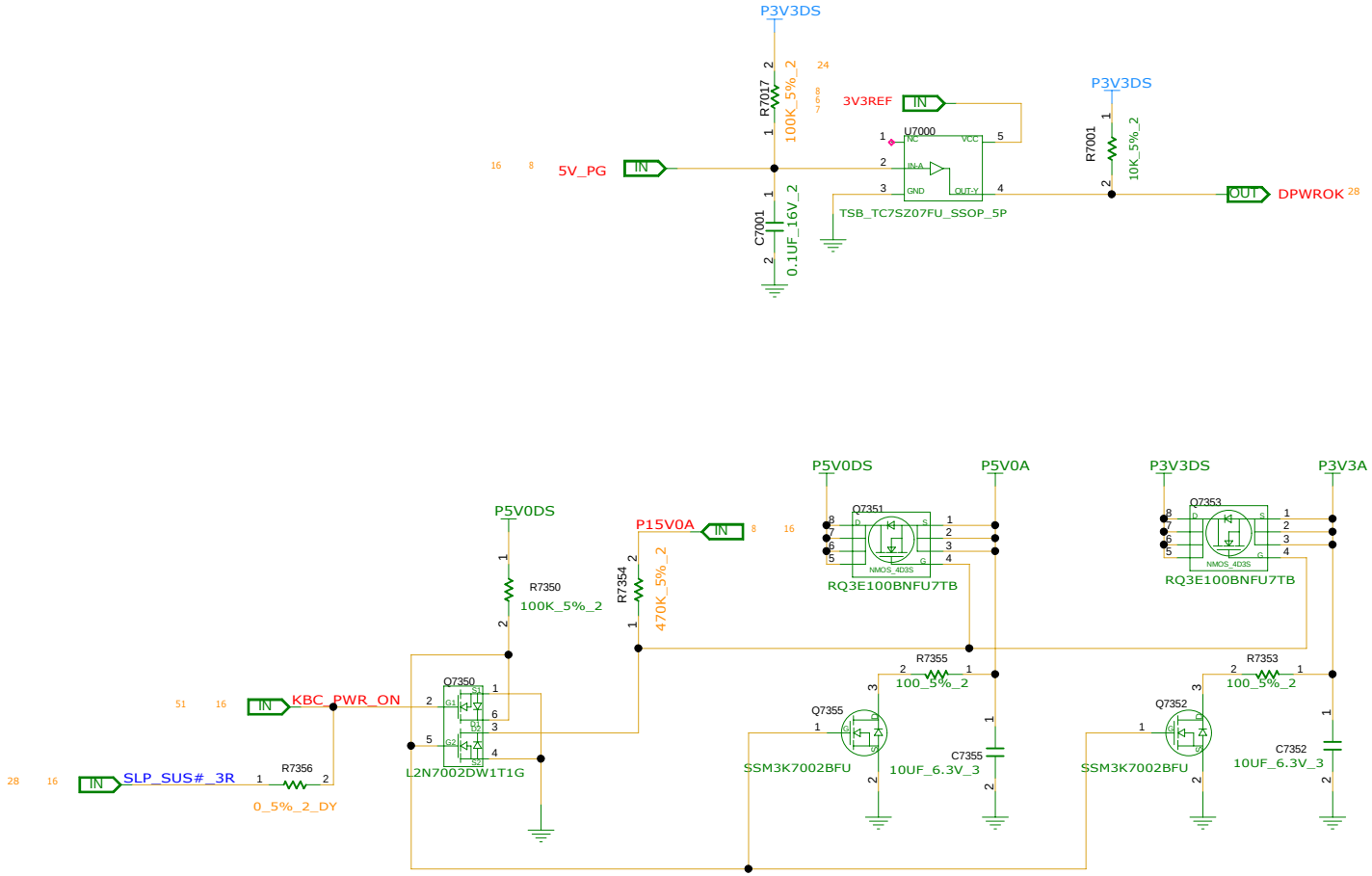

INVENTEC

TITLE
MODEL,PROJECT,FUNCTION
Block Diagram

SIZE	CODE	DOC.NUMBER	REV
A3	CS	1310xxxxx-0-0	X01

CHANGE by XXX DATE 21-OCT-2002 SHEET 18 of 77

www.indiafix.in

GPU_VID5 GPIO_10	GPU_VID4 GPIO_14	GPU_VID3 GPIO_15	GPU_VID2 GPIO_16	GPU_VID1 GPIO_20	Core Voltage Level
0	1	1	1	1	1.125V
1	0	0	0	0	1.1V
1	0	0	0	1	1.075V
1	0	0	1	0	1.05V
1	0	0	1	1	1.025V
1	0	1	0	0	1.0V
1	0	1	0	1	0.975V
1	0	1	1	0	0.95V
1	0	1	1	1	0.925V
1	1	0	0	0	0.9V
1	1	0	0	1	0.875V
1	1	0	1	0	0.85V
1	1	0	1	1	0.825V
1	1	1	0	0	0.8V
1	1	1	0	1	0.775V

	C6762	C6752	L6750	Q6751	R6756
17W	OPEN	OPEN	ETQP4LR36AFM 6014B0164501	OPEN	80.6K_1% 6013A0072901
25W	install	install	PCMC104T-R36MN 6014B0024003	install	42.2K_1% 6013A0017701

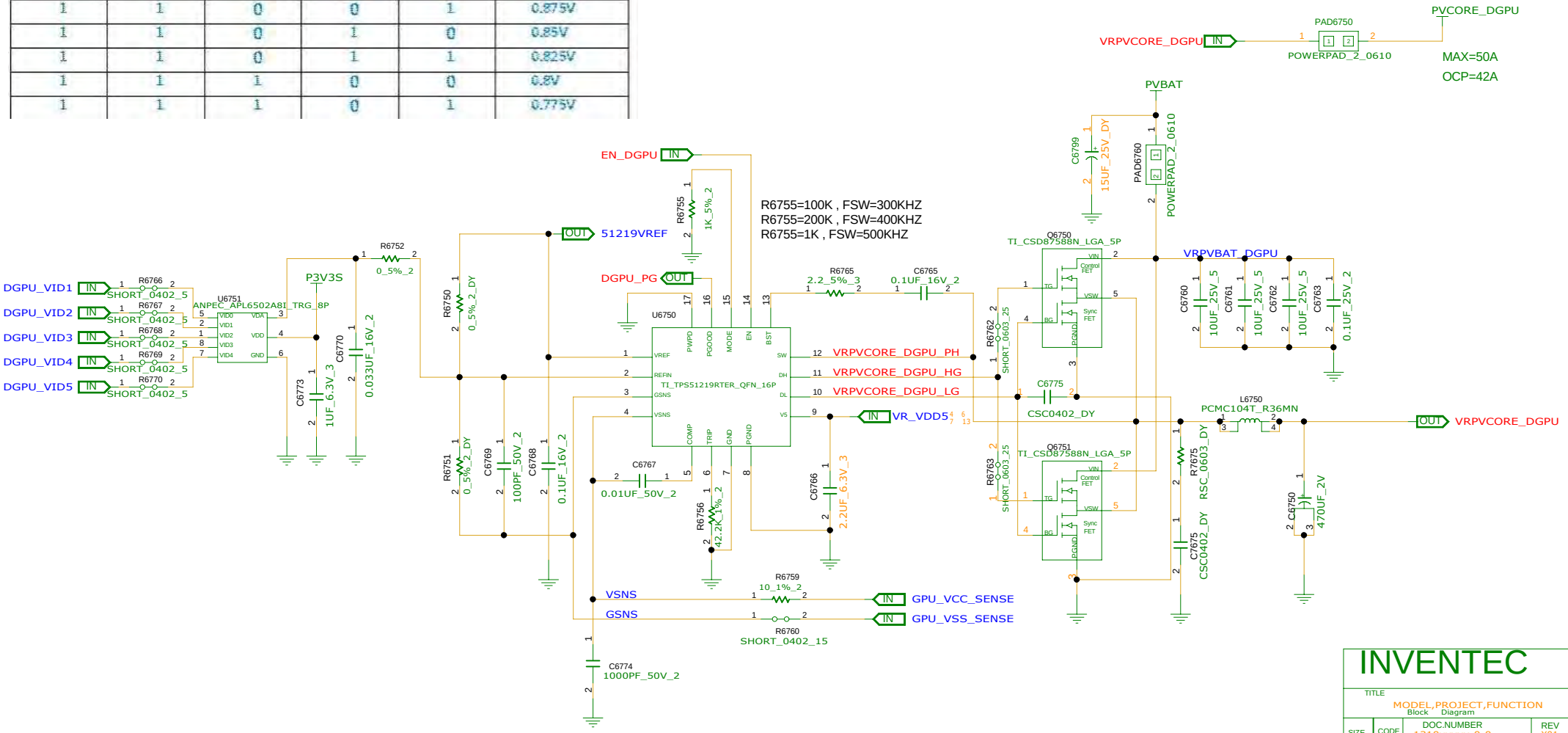

INVENTEC

TITLE: MODEL,PROJECT,FUNCTION Block Diagram

SIZE A3 | CODE CS | DOC.NUMBER 1310xxxxx-0-0 | REV X01

CHANGE by XXX | DATE 21-OCT-2002 | SHEET 19 of 77

EMPTY

INVENTEC

TITLE
MODEL,PROJECT,FUNCTION
Block Diagram

SIZE	CODE	DOC.NUMBER	REV
A3	CS	1310xxxxx-0-0	X01

CHANGE by XXX DATE 21-OCT-2002 SHEET 20 of 77

www.indiafix.in

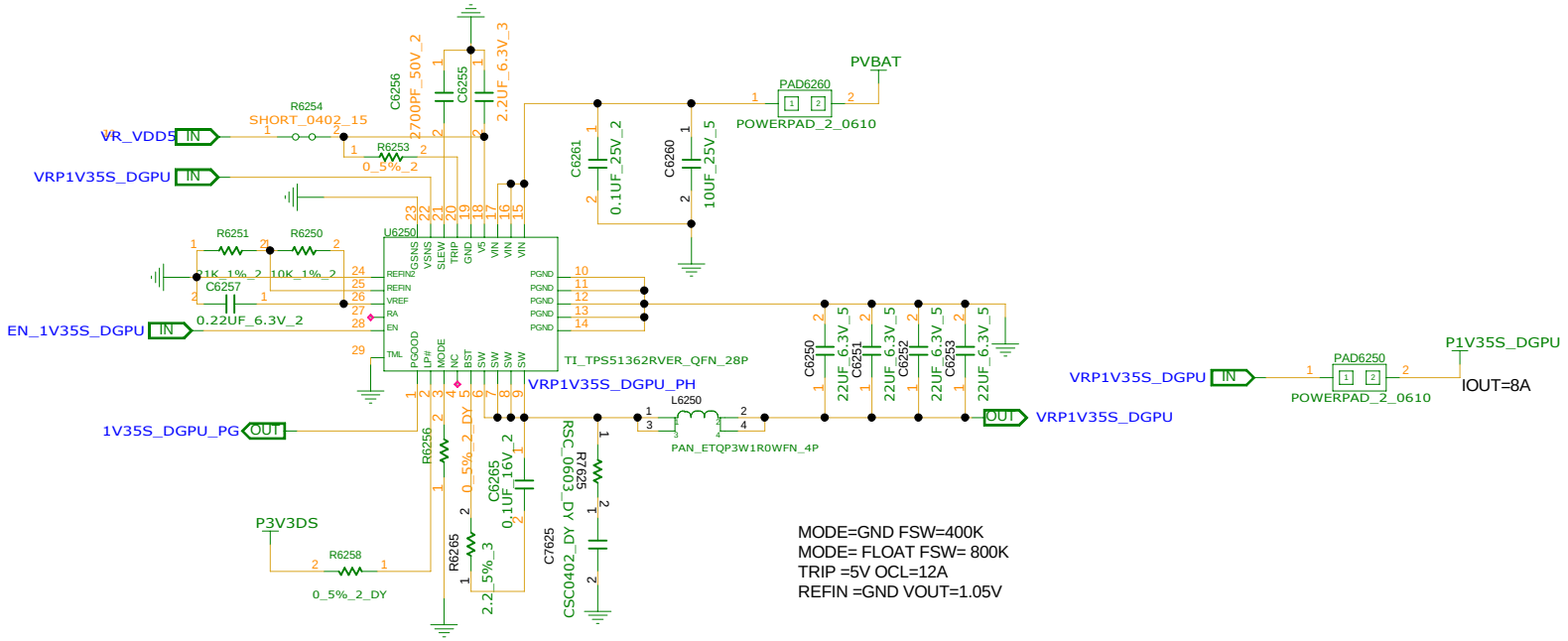

INVENTEC

TITLE
MODEL,PROJECT,FUNCTION
Block Diagram

SIZE	CODE	DOC.NUMBER	REV
A3	CS	1310xxxxx-0-0	X01

CHANGE by XXX DATE 21-OCT-2002 SHEET 21 of 77

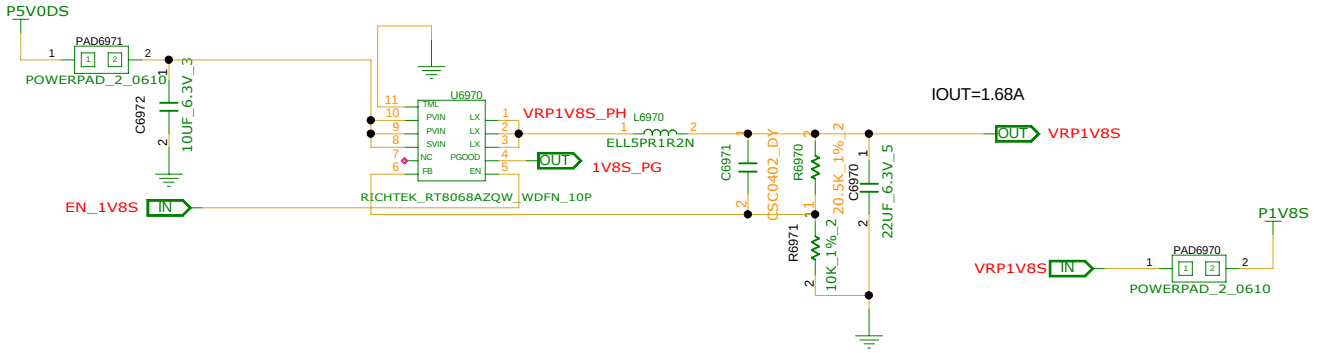

VREF=0.6V
15K=1.5V
10K=1.2V
20.5K=1.83V

MODE= FLOAT=SKIP MODE
MODE=VIN=FCCM MODE

INVENTEC

TITLE
MODEL,PROJECT,FUNCTION
Block Diagram

SIZE	CODE	DOC.NUMBER	REV
A3	CS	1310xxxxx-0-0	X01

CHANGE by XXX DATE 21-OCT-2002 SHEET 22 of 77

www.indiafix.in

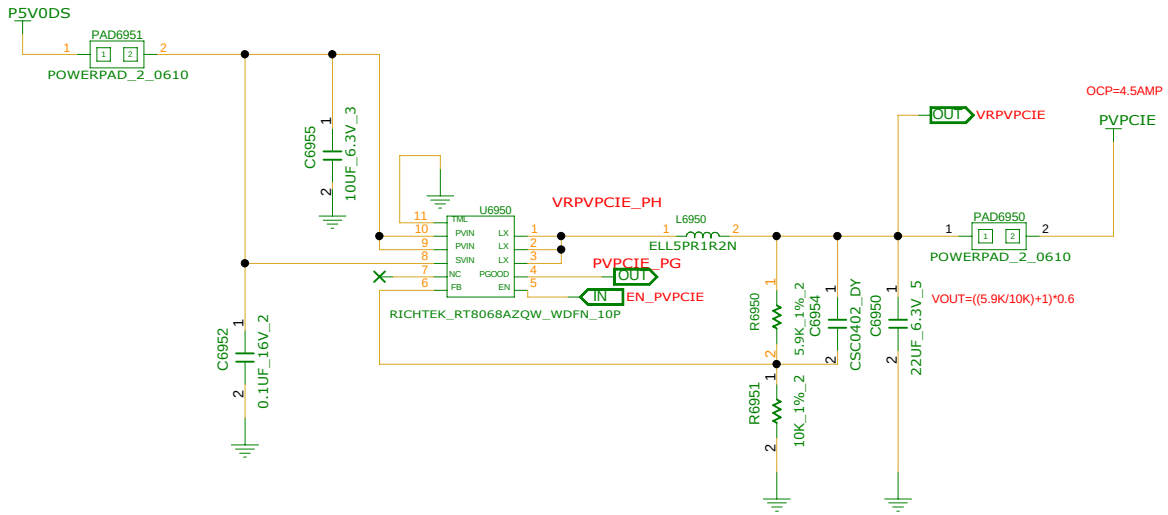

INVENTEC

TITLE
MODEL,PROJECT,FUNCTION
Block Diagram

SIZE	CODE	DOC.NUMBER	REV
A3	CS	1310xxxxx-0-0	X01

CHANGE by XXX DATE 21-OCT-2002 SHEET 23 of 77

REFERENCE NUMER : 7400~7450

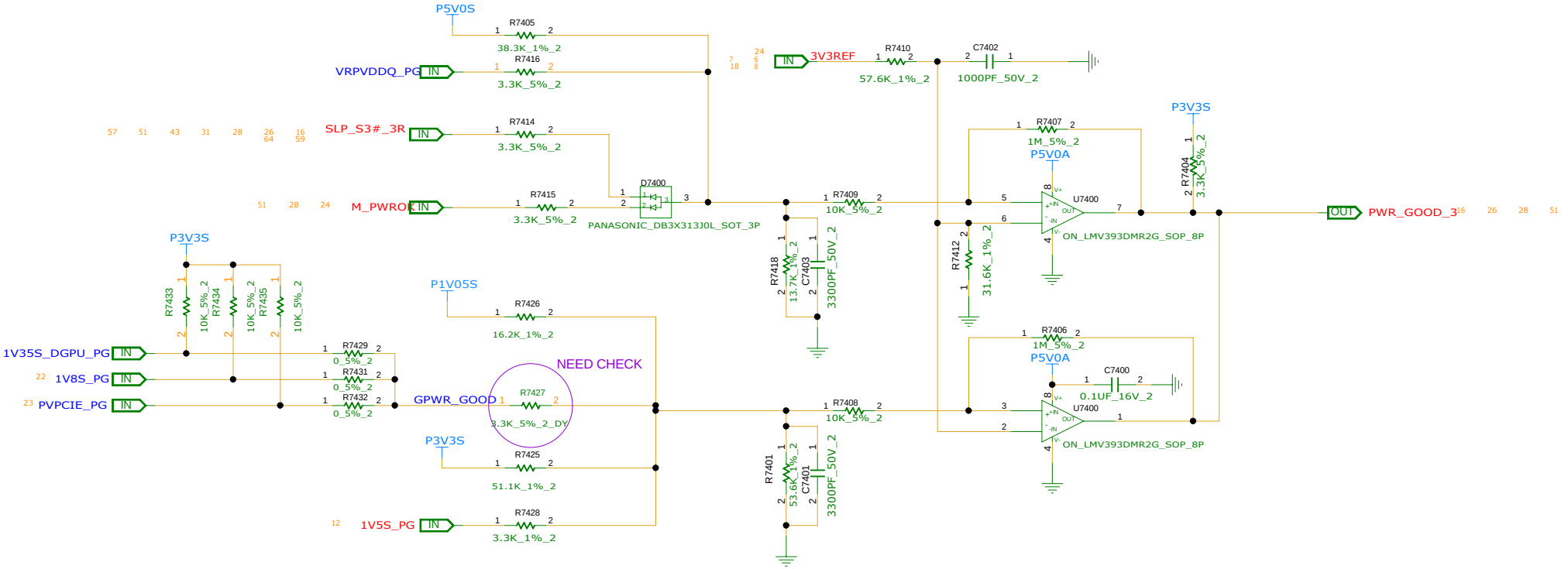

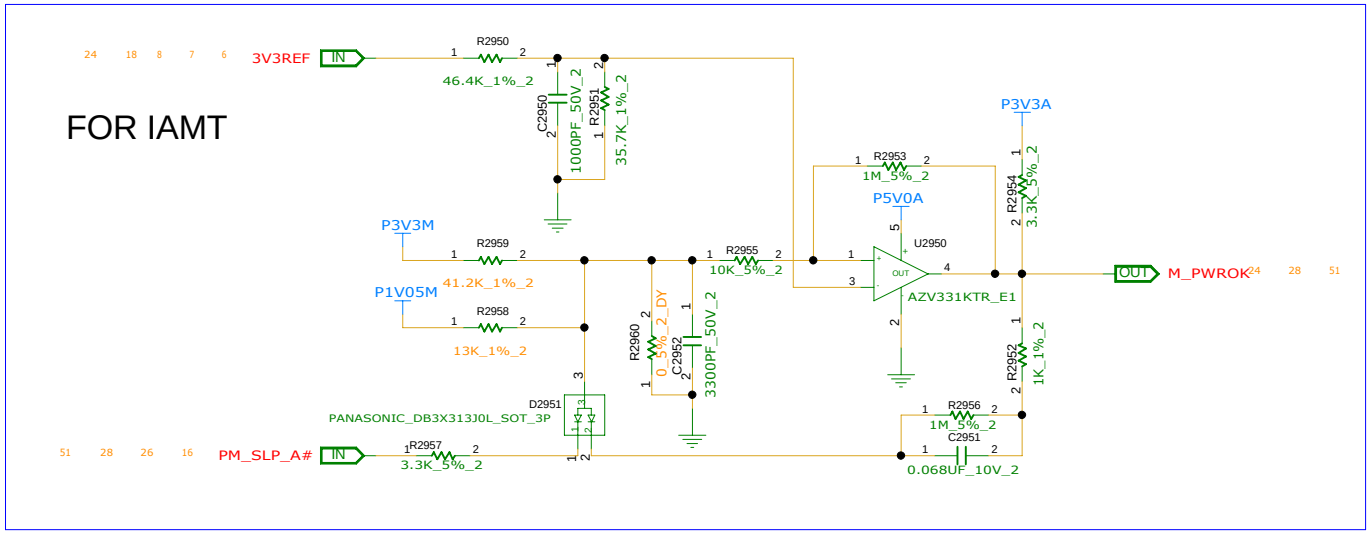

REFERENCE NUMER : 2950~2999

INVENTEC

TITLE
MODEL,PROJECT,FUNCTION
POWER(SEQUENCE)

SIZE	CODE	DOC.NUMBER	REV
A3	CS	1310xxxxx-0-0	X01

CHANGE by XXX DATE 21-OCT-2002 SHEET 24 of 77

www.indiafix.in

REFERENCE NUMBER:4400~4349

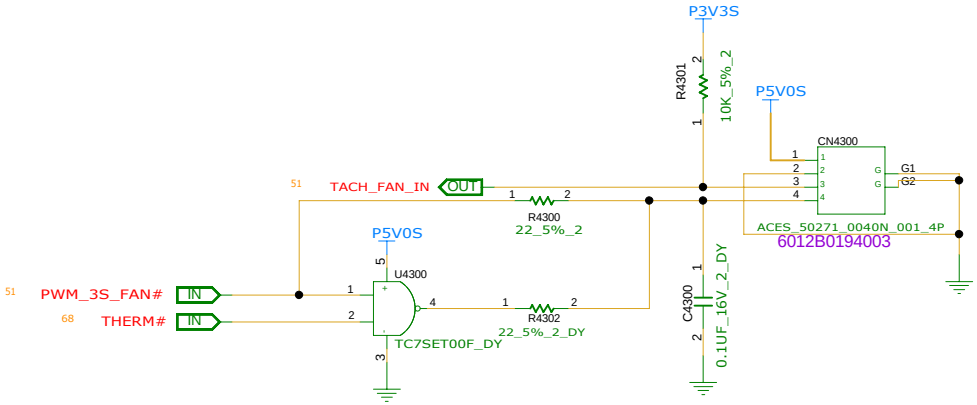

AMBIENT TEMP SENSE
WILL BE NOT USED IN 2013?

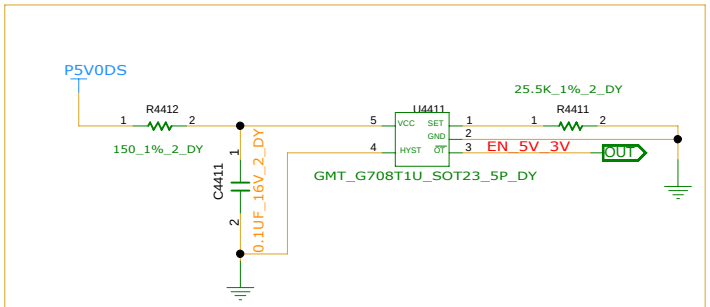

RSET (K OHM) = 0.0012T^2 - 0.9308T + 96.147
THERMAL SHUTDOWN AT 85 DEG.

REFERENCE NUMBER:4411~4449

INVENTEC			
TITLE: MODEL,PROJECT,FUNCTION FAN & THERMAL			
SIZE A3	CODE CS	DOC.NUMBER 1310xxxxx-0-0	REV X01
CHANGE by XXX	DATE 21-OCT-2002	SHEET 25 of 77	

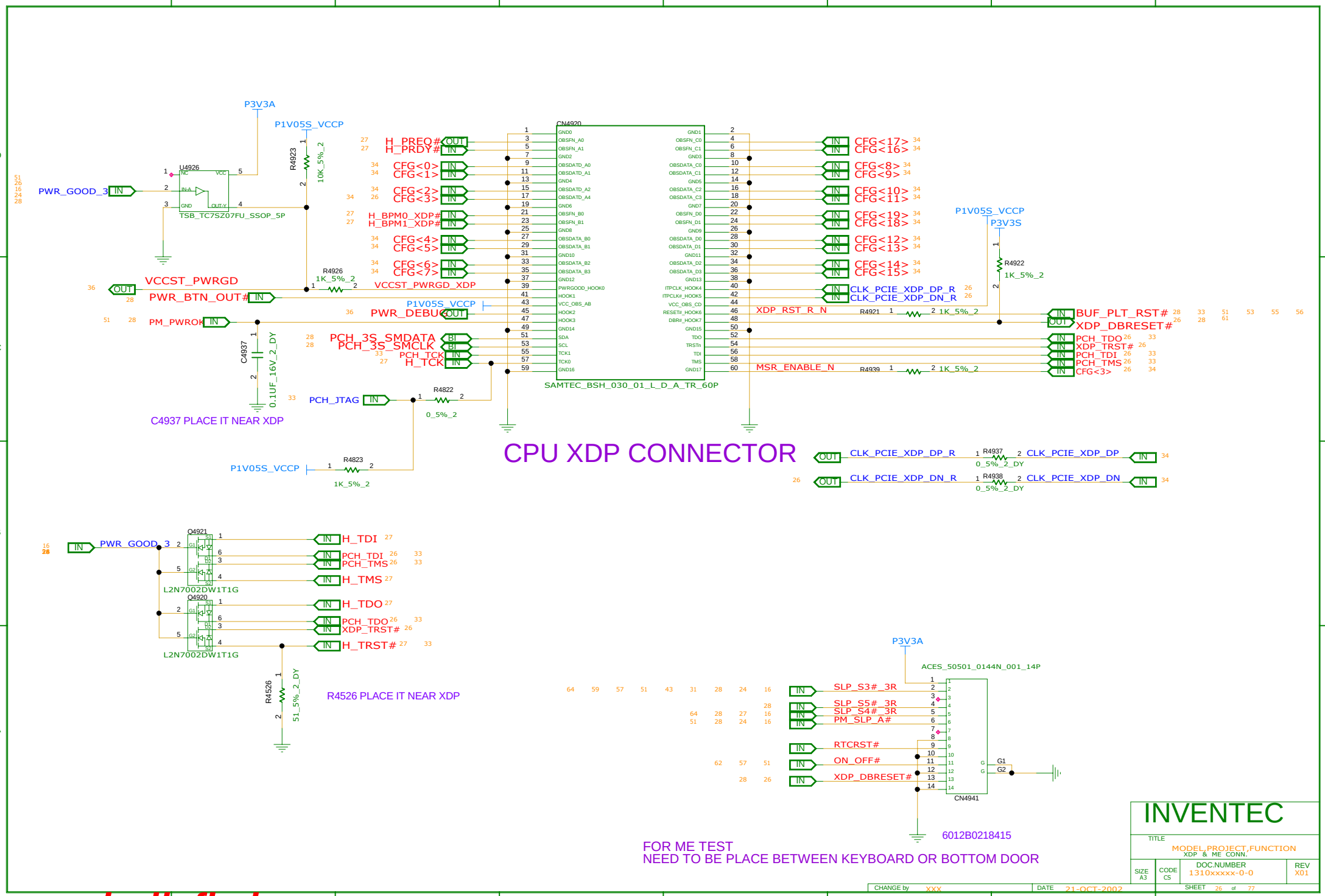

www.indiafix.in

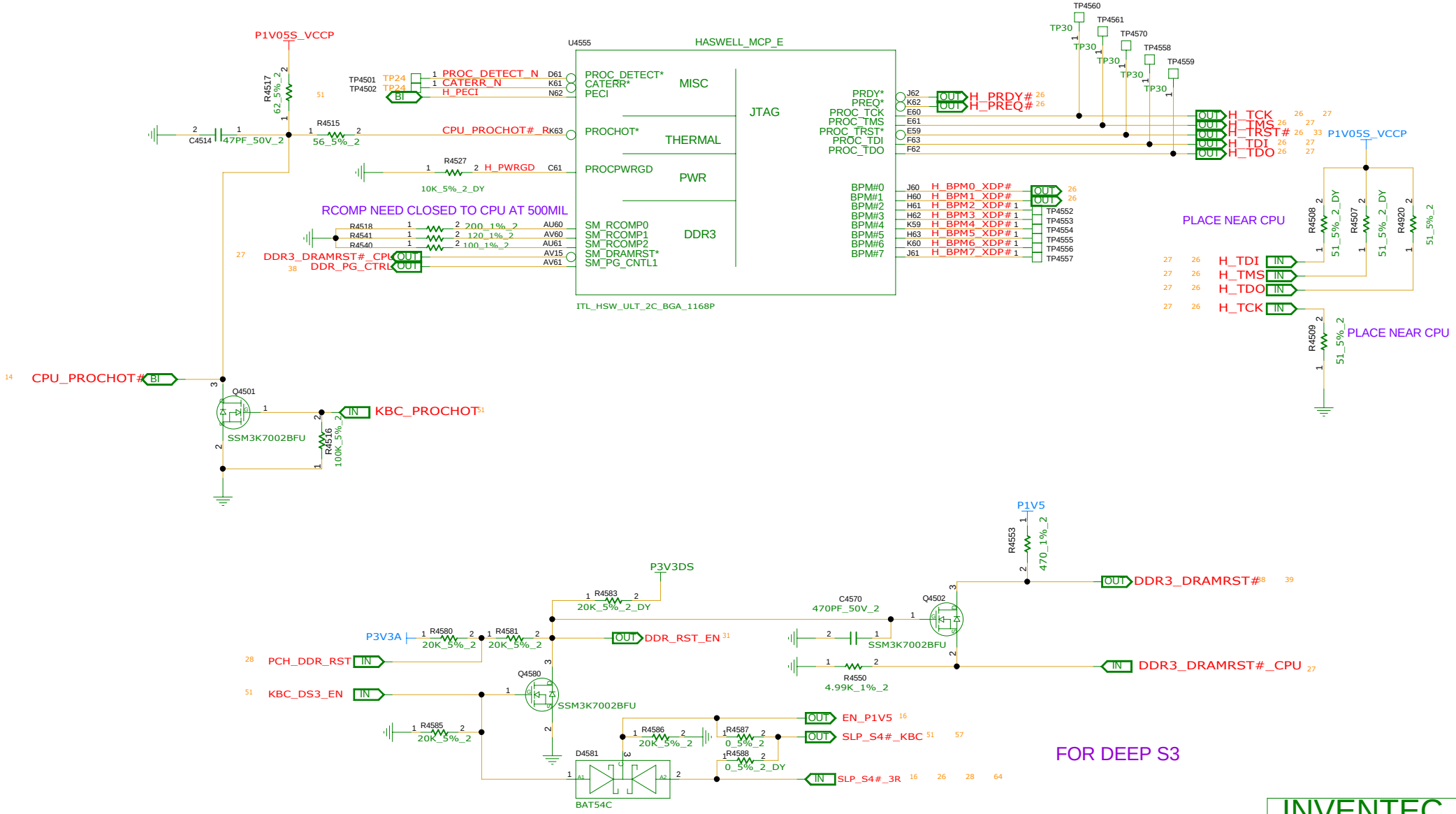

REFERENCE:4500~4949

INVENTEC

TITLE MODEL,PROJECT,FUNCTION
MCP1-MISC

SIZE	CODE	DOC.NUMBER	REV
A3	CS	1310xxxxx-0-0	X01

CHANGE by XXX DATE 21-OCT-2002 SHEET 27 of 77

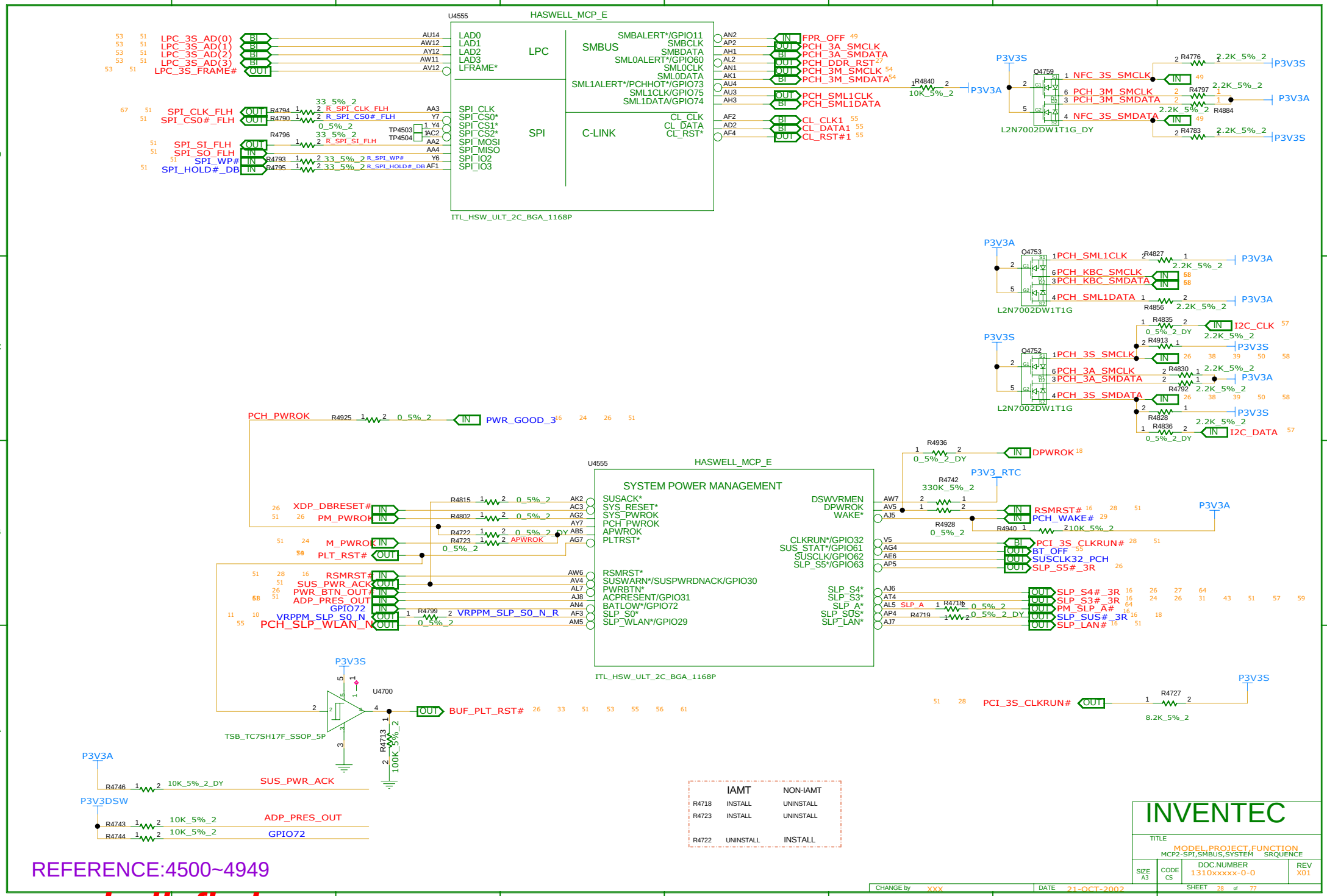

www.indiafix.in

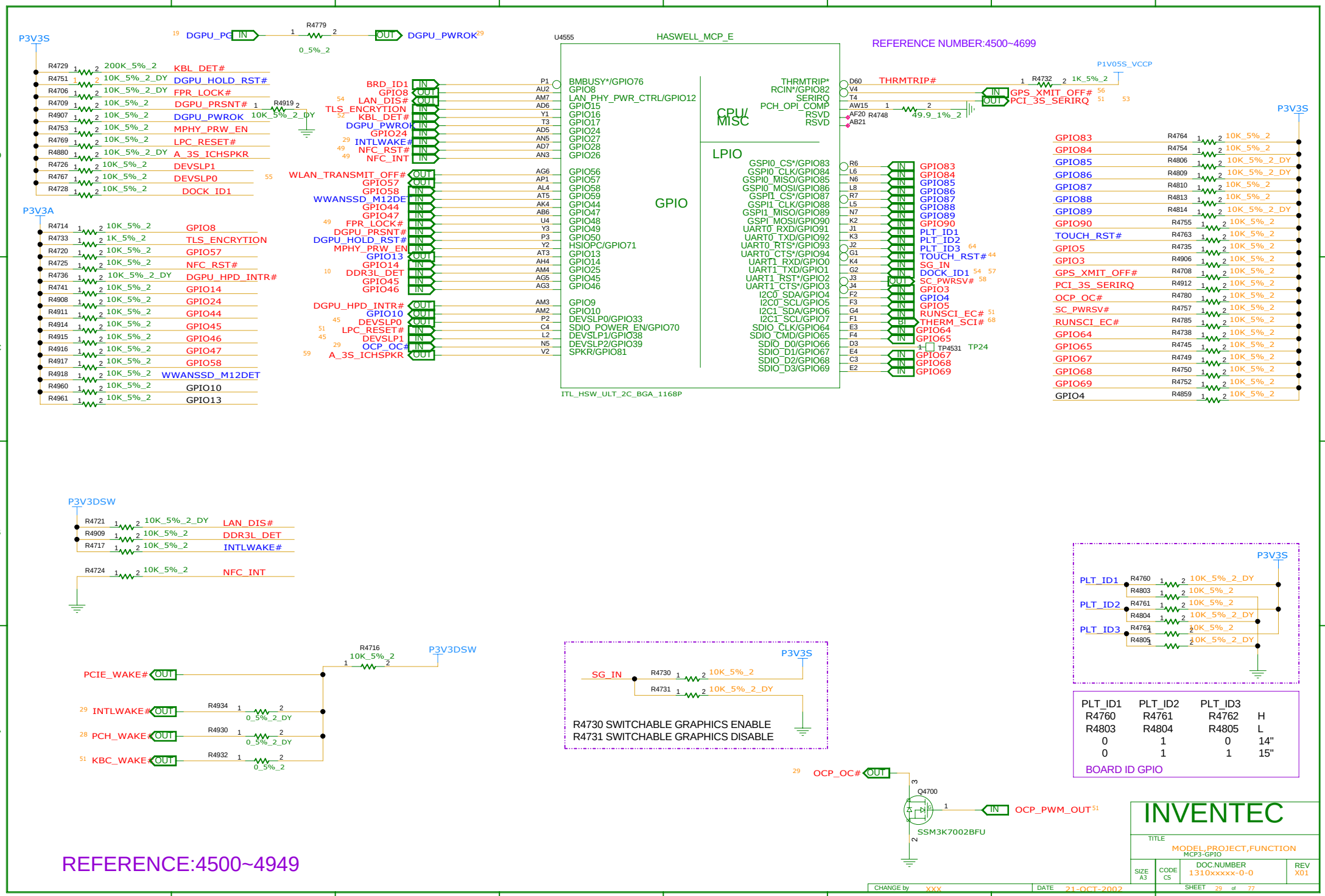
P3V3S
R4729 200K_5%_2 KBL_DET#
R4751 10K_5%_2_DY DGPU_HOLD_RST#
R4706 10K_5%_2_DY FPR_LOCK#
R4709 10K_5%_2 DGPU_PRSNT#
R4907 10K_5%_2 DGPU_PWROK
R4753 10K_5%_2 MPHY_PRW_EN
R4769 10K_5%_2 LPC_RESET#
R4880 10K_5%_2_DY A_3S_ICHSPKR
R4726 10K_5%_2 DEVSLP1
R4767 10K_5%_2 DEVSLP0
R4728 10K_5%_2 DOCK_ID1
P3V3A
R4714 10K_5%_2 GPIO8
R4733 1K_5%_2 TLS_ENCRYTION
R4720 10K_5%_2 GPIO57
R4725 10K_5%_2 NFC_RST#
R4736 10K_5%_2_DY DGPU_HPD_INTR#
R4741 10K_5%_2 GPIO14
R4908 10K_5%_2 GPIO24
R4911 10K_5%_2 GPIO44
R4914 10K_5%_2 GPIO45
R4915 10K_5%_2 GPIO46
R4916 10K_5%_2 GPIO47
R4917 10K_5%_2 GPIO58
R4918 10K_5%_2 WWANSSD_M12DET
R4960 10K_5%_2 GPIO10
R4961 10K_5%_2 GPIO13
DGPU_PG IN
R4779 0_5%_2
OUT DGPU_PWROK
U4555 HASWELL_MCP_E
REFERENCE NUMBER:4500~4699
BRD_ID1 IN P1
GPIO8 OUT AU2
LAN_DIS# OUT AM7
TLS_ENCRYTION IN AD6
KBL_DET# IN Y1
DGPU_PWROK IN T3
GPIO24 IN AD5
INTLWAKE# IN AN5
NFC_RST# IN AD7
NFC_INT IN AN3
WLAN_TRANSMIT_OFF# OUT AG6
GPIO57 OUT AP1
GPIO58 IN AL4
WWANSSD_M12DET IN AT5
GPIO44 IN AK4
GPIO47 IN AB6
FPR_LOCK# IN U4
DGPU_PRSNT# IN Y3
DGPU_HOLD_RST# IN P3
MPHY_PRW_EN IN Y2
GPIO13 OUT AT3
GPIO14 IN AH4
DDR3L_DET IN AM4
GPIO45 IN AG5
GPIO46 IN AG3
DGPU_HPD_INTR# OUT AM3
GPIO10 OUT AM2
DEVSLP0 OUT P2
LPC_RESET# IN C4
DEVSLP1 IN L2
OCP_OC# IN N5
A_3S_ICHSPKR OUT V2
BMBUSY*/GPIO76
GPIO8
LAN_PHY_PWR_CTRL/GPIO12
GPIO15
GPIO16
GPIO17
GPIO24
GPIO27
GPIO28
GPIO26
GPIO56
GPIO57
GPIO58
GPIO59
GPIO44
GPIO47
GPIO48
GPIO49
GPIO50
HSIOPC/GPIO71
GPIO13
GPIO14
GPIO25
GPIO45
GPIO46
GPIO9
GPIO10
DEVSLP0/GPIO33
SDIO_POWER_EN/GPIO70
DEVSLP1/GPIO38
DEVSLP2/GPIO39
SPKR/GPIO81
CPU/MISC
THRMTRIP* D60
RCIN*/GPIO82 V4
SERIRQ T4
PCH_OPI_COMP AW15
RSVD AF20
RSVD AB21
R4748 49.9_1%_2
THRMTRIP#
P1V05S_VCCP
R4732 1K_5%_2
IN GPS_XMIT_OFF#
OUT PCI_3S_SERIRQ
LPIO
GSPI0_CS*/GPIO83 R6 IN GPIO83
GSPI0_CLK/GPIO84 L6 IN GPIO84
GSPI0_MISO/GPIO85 N6 IN GPIO85
GSPI0_MOSI/GPIO86 L8 IN GPIO86
GSPI1_CS*/GPIO87 R7 IN GPIO87
GSPI1_CLK/GPIO88 L5 IN GPIO88
GSPI1_MISO/GPIO89 N7 IN GPIO89
GSPI_MOSI/GPIO90 K2 IN GPIO90
UART0_RXD/GPIO91 J1 IN PLT_ID1
UART0_TXD/GPIO92 K3 IN PLT_ID2
UART0_RTS*/GPIO93 J2 IN PLT_ID3
UART0_CTS*/GPIO94 G1 IN TOUCH_RST#
UART1_RXD/GPIO0 K4 IN SG_IN
UART1_TXD/GPIO1 G2 IN DOCK_ID1
UART1_RST*/GPIO2 J3 OUT SC_PWRSV#
UART1_CTS*/GPIO3 J4 IN GPIO3
I2C0_SDA/GPIO4 F2 IN GPIO4
I2C0_SCL/GPIO5 F3 IN GPIO5
I2C1_SDA/GPIO6 G4 IN RUNSCI_EC#
I2C1_SCL/GPIO7 F1 BI THERM_SCI#
SDIO_CLK/GPIO64 E3 IN GPIO64
SDIO_CMD/GPIO65 F4 IN GPIO65
SDIO_D0/GPIO66 D3 TP4531 TP24
SDIO_D1/GPIO67 E4 IN GPIO67
SDIO_D2/GPIO68 C3 IN GPIO68
SDIO_D3/GPIO69 E2 IN GPIO69
GPIO
ITL_HSW_ULT_2C_BGA_1168P
P3V3S
GPIO83 R4764 10K_5%_2
GPIO84 R4754 10K_5%_2
GPIO85 R4806 10K_5%_2_DY
GPIO86 R4809 10K_5%_2_DY
GPIO87 R4810 10K_5%_2
GPIO88 R4813 10K_5%_2
GPIO89 R4814 10K_5%_2_DY
GPIO90 R4755 10K_5%_2
TOUCH_RST# R4763 10K_5%_2
GPIO5 R4735 10K_5%_2
GPIO3 R4906 10K_5%_2
GPS_XMIT_OFF# R4708 10K_5%_2
PCI_3S_SERIRQ R4912 10K_5%_2
OCP_OC# R4780 10K_5%_2
SC_PWRSV# R4757 10K_5%_2
RUNSCI_EC# R4785 10K_5%_2
GPIO64 R4738 10K_5%_2
GPIO65 R4745 10K_5%_2
GPIO67 R4749 10K_5%_2
GPIO68 R4750 10K_5%_2
GPIO69 R4752 10K_5%_2
GPIO4 R4859 10K_5%_2
P3V3DSW
R4721 10K_5%_2_DY LAN_DIS#
R4909 10K_5%_2 DDR3L_DET
R4717 10K_5%_2 INTLWAKE#
R4724 10K_5%_2 NFC_INT
PCIE_WAKE# OUT
R4716 10K_5%_2
P3V3DSW
INTLWAKE# OUT R4934 0_5%_2_DY
PCH_WAKE# OUT R4930 0_5%_2_DY
KBC_WAKE# OUT R4932 0_5%_2
P3V3S
SG_IN
R4730 10K_5%_2
R4731 10K_5%_2_DY
R4730 SWITCHABLE GRAPHICS ENABLE
R4731 SWITCHABLE GRAPHICS DISABLE
P3V3S
PLT_ID1 R4760 10K_5%_2_DY R4803 10K_5%_2
PLT_ID2 R4761 10K_5%_2 R4804 10K_5%_2_DY
PLT_ID3 R4762 10K_5%_2 R4805 10K_5%_2_DY
PLT_ID1 PLT_ID2 PLT_ID3
R4760 R4761 R4762 H
R4803 R4804 R4805 L
0 1 0 14"
0 1 1 15"
BOARD ID GPIO
OCP_OC# OUT
Q4700
SSM3K7002BFU
IN OCP_PWM_OUT
REFERENCE:4500~4949
INVENTEC
TITLE
MODEL,PROJECT,FUNCTION
MCP3-GPIO
SIZE A3
CODE CS
DOC.NUMBER 1310xxxxx-0-0
REV X01
CHANGE by XXX
DATE 21-OCT-2002
SHEET 29 of 77

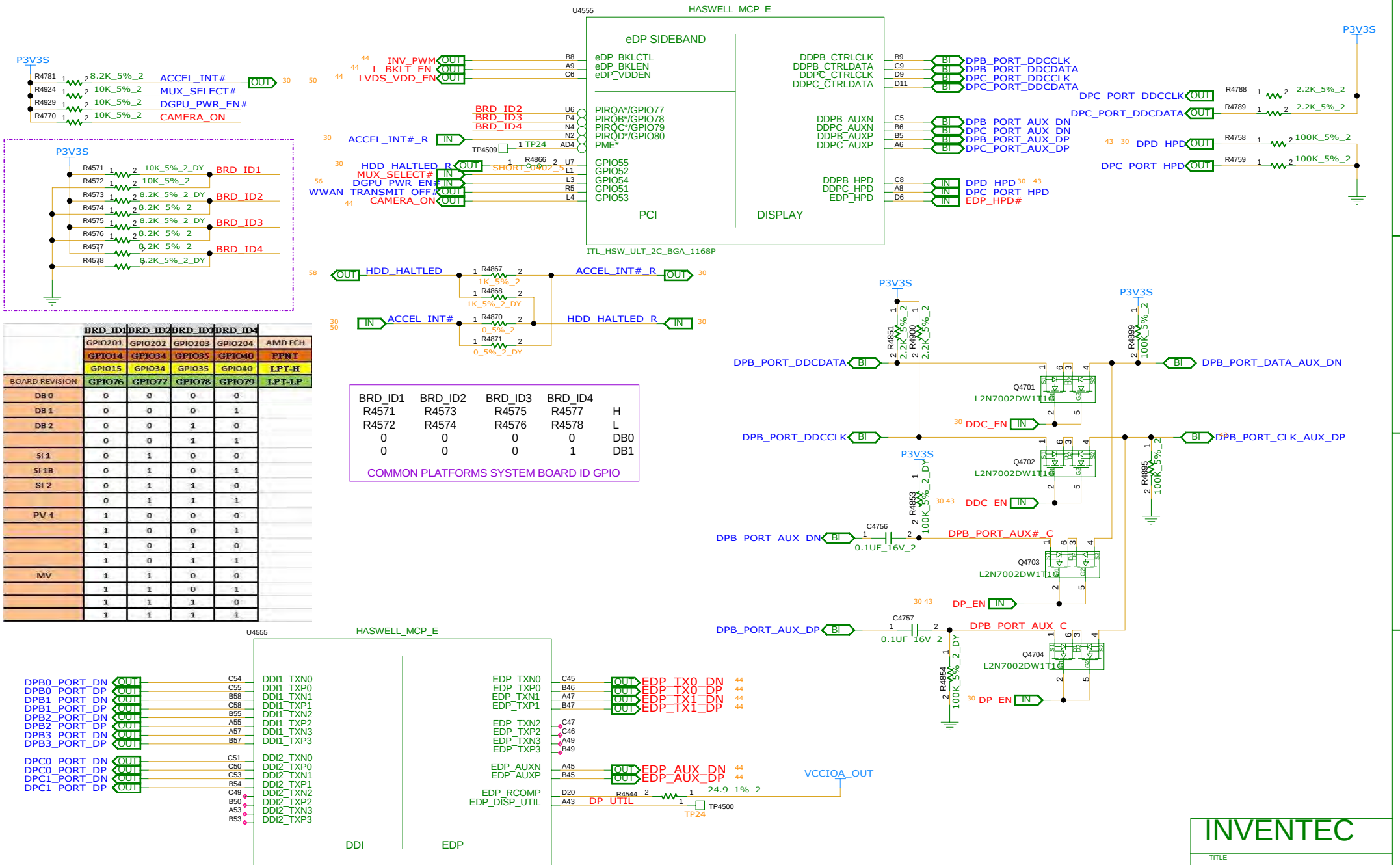

	BRD_ID1	BRD_ID2	BRD_ID3	BRD_ID4	
	GPIO201	GPIO202	GPIO203	GPIO204	AMD FCH
	GPIO14	GPIO34	GPIO35	GPIO40	PPNT
	GPIO15	GPIO34	GPIO35	GPIO40	LPT-H
BOARD REVISION	GPIO76	GPIO77	GPIO78	GPIO79	LPT-LP
DB 0	0	0	0	0	
DB 1	0	0	0	1	
DB 2	0	0	1	0	
	0	0	1	1	
SI 1	0	1	0	0	
SI 1B	0	1	0	1	
SI 2	0	1	1	0	
	0	1	1	1	
PV 1	1	0	0	0	
	1	0	0	1	
	1	0	1	0	
	1	0	1	1	
MV	1	1	0	0	
	1	1	0	1	
	1	1	1	0	
	1	1	1	1	

BRD_ID1	BRD_ID2	BRD_ID3	BRD_ID4	
R4571	R4573	R4575	R4577	H
R4572	R4574	R4576	R4578	L
0	0	0	0	DB0
0	0	0	1	DB1

COMMON PLATFORMS SYSTEM BOARD ID GPIO

www.indiafix.in

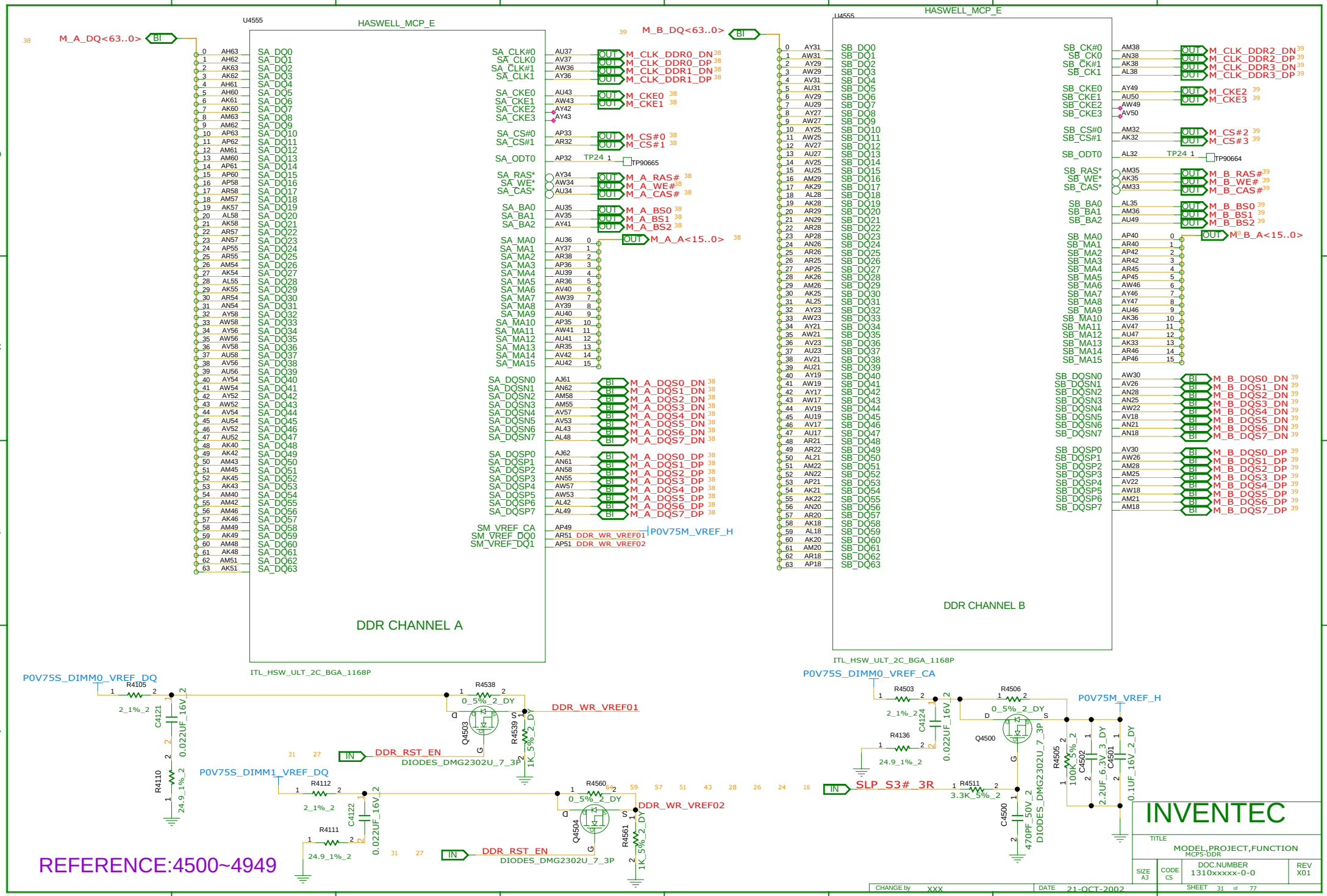
HASWELL_MCP_E
U4555
M_A_DQ<63..0>
SA_DQ0 SA_DQ1 SA_DQ2 SA_DQ3 SA_DQ4 SA_DQ5 SA_DQ6 SA_DQ7 SA_DQ8 SA_DQ9 SA_DQ10 SA_DQ11 SA_DQ12 SA_DQ13 SA_DQ14 SA_DQ15 SA_DQ16 SA_DQ17 SA_DQ18 SA_DQ19 SA_DQ20 SA_DQ21 SA_DQ22 SA_DQ23 SA_DQ24 SA_DQ25 SA_DQ26 SA_DQ27 SA_DQ28 SA_DQ29 SA_DQ30 SA_DQ31 SA_DQ32 SA_DQ33 SA_DQ34 SA_DQ35 SA_DQ36 SA_DQ37 SA_DQ38 SA_DQ39 SA_DQ40 SA_DQ41 SA_DQ42 SA_DQ43 SA_DQ44 SA_DQ45 SA_DQ46 SA_DQ47 SA_DQ48 SA_DQ49 SA_DQ50 SA_DQ51 SA_DQ52 SA_DQ53 SA_DQ54 SA_DQ55 SA_DQ56 SA_DQ57 SA_DQ58 SA_DQ59 SA_DQ60 SA_DQ61 SA_DQ62 SA_DQ63
SA_CLK#0 SA_CLK0 SA_CLK#1 SA_CLK1
M_CLK_DDR0_DN M_CLK_DDR0_DP M_CLK_DDR1_DN M_CLK_DDR1_DP
SA_CKE0 SA_CKE1 SA_CKE2 SA_CKE3
M_CKE0 M_CKE1
SA_CS#0 SA_CS#1
M_CS#0 M_CS#1
SA_ODT0
TP24 TP90665
SA_RAS* SA_WE* SA_CAS*
M_A_RAS# M_A_WE# M_A_CAS#
SA_BA0 SA_BA1 SA_BA2
M_A_BS0 M_A_BS1 M_A_BS2
SA_MA0 SA_MA1 SA_MA2 SA_MA3 SA_MA4 SA_MA5 SA_MA6 SA_MA7 SA_MA8 SA_MA9 SA_MA10 SA_MA11 SA_MA12 SA_MA13 SA_MA14 SA_MA15
M_A_A<15..0>
SA_DQSN0 SA_DQSN1 SA_DQSN2 SA_DQSN3 SA_DQSN4 SA_DQSN5 SA_DQSN6 SA_DQSN7
M_A_DQS0_DN M_A_DQS1_DN M_A_DQS2_DN M_A_DQS3_DN M_A_DQS4_DN M_A_DQS5_DN M_A_DQS6_DN M_A_DQS7_DN
SA_DQSP0 SA_DQSP1 SA_DQSP2 SA_DQSP3 SA_DQSP4 SA_DQSP5 SA_DQSP6 SA_DQSP7
M_A_DQS0_DP M_A_DQS1_DP M_A_DQS2_DP M_A_DQS3_DP M_A_DQS4_DP M_A_DQS5_DP M_A_DQS6_DP M_A_DQS7_DP
SM_VREF_CA SM_VREF_DQ0 SM_VREF_DQ1
P0V75M_VREF_H
DDR_WR_VREF01 DDR_WR_VREF02
DDR CHANNEL A
ITL_HSW_ULT_2C_BGA_1168P
M_B_DQ<63..0>
SB_DQ0 SB_DQ1 SB_DQ2 SB_DQ3 SB_DQ4 SB_DQ5 SB_DQ6 SB_DQ7 SB_DQ8 SB_DQ9 SB_DQ10 SB_DQ11 SB_DQ12 SB_DQ13 SB_DQ14 SB_DQ15 SB_DQ16 SB_DQ17 SB_DQ18 SB_DQ19 SB_DQ20 SB_DQ21 SB_DQ22 SB_DQ23 SB_DQ24 SB_DQ25 SB_DQ26 SB_DQ27 SB_DQ28 SB_DQ29 SB_DQ30 SB_DQ31 SB_DQ32 SB_DQ33 SB_DQ34 SB_DQ35 SB_DQ36 SB_DQ37 SB_DQ38 SB_DQ39 SB_DQ40 SB_DQ41 SB_DQ42 SB_DQ43 SB_DQ44 SB_DQ45 SB_DQ46 SB_DQ47 SB_DQ48 SB_DQ49 SB_DQ50 SB_DQ51 SB_DQ52 SB_DQ53 SB_DQ54 SB_DQ55 SB_DQ56 SB_DQ57 SB_DQ58 SB_DQ59 SB_DQ60 SB_DQ61 SB_DQ62 SB_DQ63
SB_CK#0 SB_CK0 SB_CK#1 SB_CK1
M_CLK_DDR2_DN M_CLK_DDR2_DP M_CLK_DDR3_DN M_CLK_DDR3_DP
SB_CKE0 SB_CKE1 SB_CKE2 SB_CKE3
M_CKE2 M_CKE3
SB_CS#0 SB_CS#1
M_CS#2 M_CS#3
SB_ODT0
TP24 TP90664
SB_RAS* SB_WE* SB_CAS*
M_B_RAS# M_B_WE# M_B_CAS#
SB_BA0 SB_BA1 SB_BA2
M_B_BS0 M_B_BS1 M_B_BS2
SB_MA0 SB_MA1 SB_MA2 SB_MA3 SB_MA4 SB_MA5 SB_MA6 SB_MA7 SB_MA8 SB_MA9 SB_MA10 SB_MA11 SB_MA12 SB_MA13 SB_MA14 SB_MA15
M_B_A<15..0>
SB_DQSN0 SB_DQSN1 SB_DQSN2 SB_DQSN3 SB_DQSN4 SB_DQSN5 SB_DQSN6 SB_DQSN7
M_B_DQS0_DN M_B_DQS1_DN M_B_DQS2_DN M_B_DQS3_DN M_B_DQS4_DN M_B_DQS5_DN M_B_DQS6_DN M_B_DQS7_DN
SB_DQSP0 SB_DQSP1 SB_DQSP2 SB_DQSP3 SB_DQSP4 SB_DQSP5 SB_DQSP6 SB_DQSP7
M_B_DQS0_DP M_B_DQS1_DP M_B_DQS2_DP M_B_DQS3_DP M_B_DQS4_DP M_B_DQS5_DP M_B_DQS6_DP M_B_DQS7_DP
DDR CHANNEL B
ITL_HSW_ULT_2C_BGA_1168P
P0V75S_DIMM0_VREF_DQ
P0V75S_DIMM1_VREF_DQ
P0V75S_DIMM0_VREF_CA
P0V75M_VREF_H
R4105 2_1%_2
C4121 0.022UF_16V_2
R4110 24.9_1%_2
R4538 0_5%_2_DY
Q4503 DIODES_DMG2302U_7_3P
R4539 1K_5%_2_DY
DDR_RST_EN
R4112 2_1%_2
C4122 0.022UF_16V_2
R4111 24.9_1%_2
R4560 0_5%_2_DY
Q4504
R4561 1K_5%_2_DY
R4503 2_1%_2
C4124 0.022UF_16V_2
R4136 24.9_1%_2
R4506 0_5%_2_DY
Q4500
R4505 100K_5%_2
C4502 2.2UF_6.3V_3_DY
C4501 0.1UF_16V_2_DY
SLP_S3#_3R
R4511 3.3K_5%_2
C4500 470PF_50V_2
INVENTEC
TITLE
MODEL,PROJECT,FUNCTION
MCP5-DDR
SIZE A3
CODE CS
DOC.NUMBER 1310xxxxx-0-0
REV X01
CHANGE by XXX
DATE 21-OCT-2002
SHEET 31 of 77
REFERENCE:4500~4949

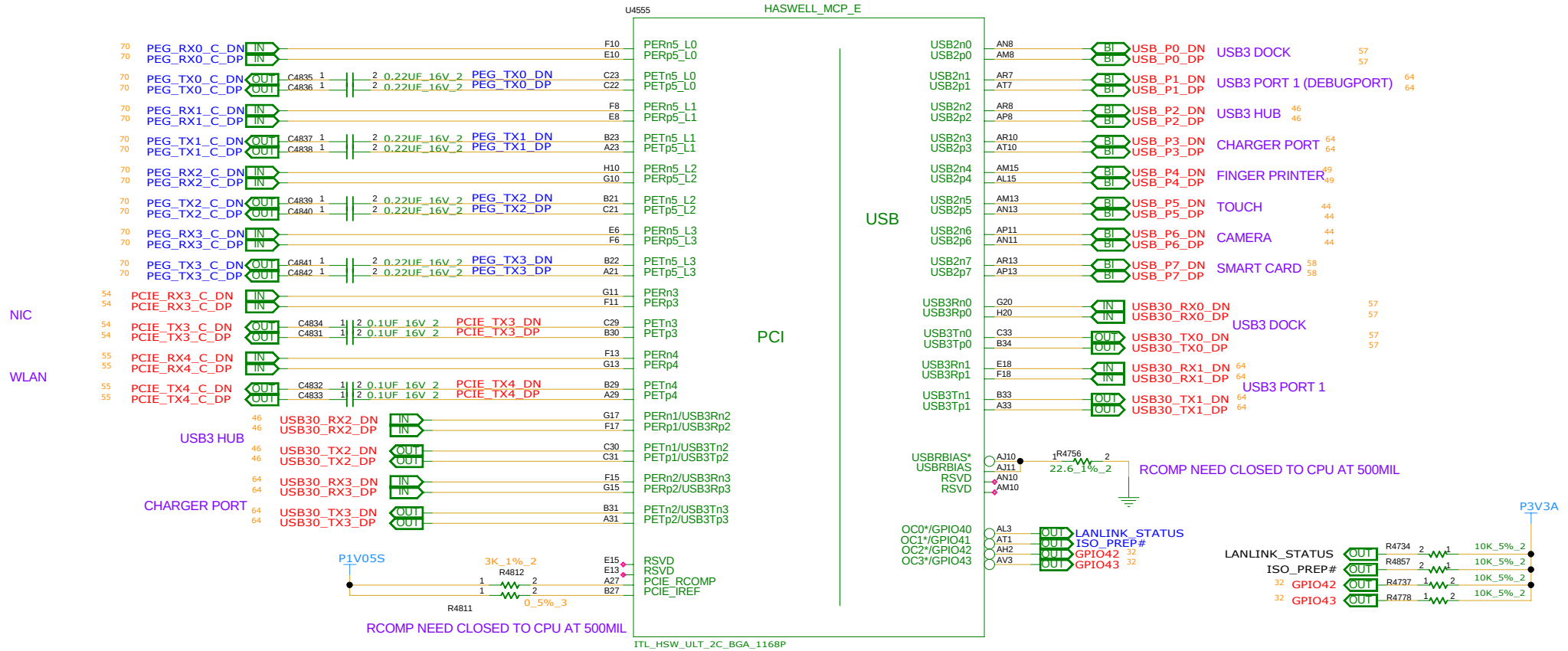

REFERENCE:4700~4949

INVENTEC

TITLE MODEL,PROJECT,FUNCTION
MCP6-PCIE,USB

SIZE	CODE	DOC.NUMBER	REV
A3	CS	1310xxxxx-0-0	X01

CHANGE by XXX DATE 21-OCT-2002 SHEET 32 of 77

www.indiafix.in

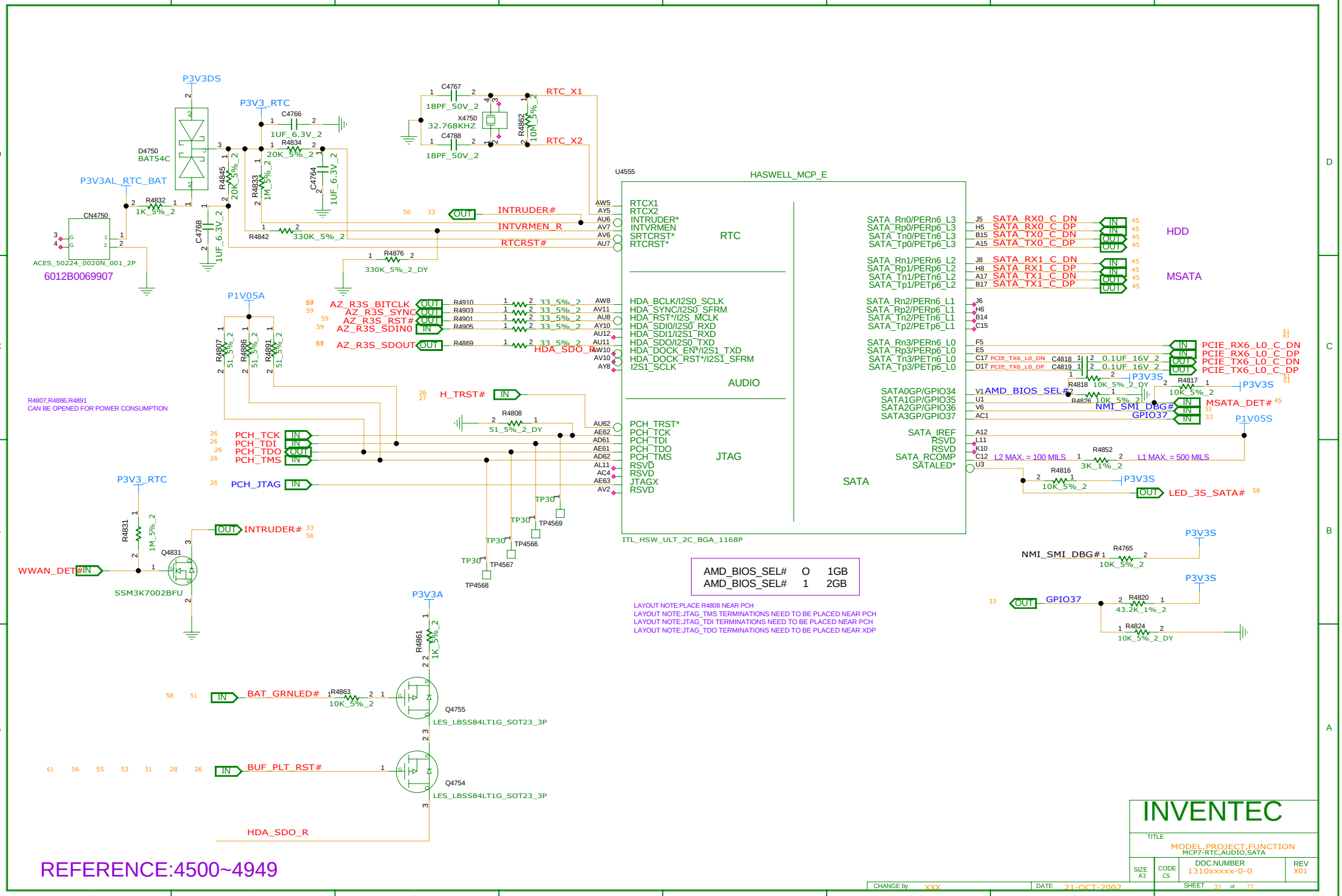
P3V3DS
P3V3_RTC
D4750
BAT54C
P3V3AL_RTC_BAT
CN4750
ACES_50224_0020N_001_2P
6012B0069907
C4767
18PF_50V_2
X4750
32.768KHZ
C4788
18PF_50V_2
RTC_X1
RTC_X2
R4862
10M_5%_2
C4766
1UF_6.3V_2
R4834
20K_5%_2
R4845
20K_5%_2
R4833
1M_5%_2
C4764
1UF_6.3V_2
R4832
1K_5%_2
C4768
1UF_6.3V_2
R4842
330K_5%_2
R4876
330K_5%_2_DY
INTRUDER#
INTVRMEN_R
RTCRST#
U4555
HASWELL_MCP_E
RTC
AUDIO
JTAG
SATA
HDD
MSATA
ITL_HSW_ULT_2C_BGA_1168P
P1V05A
AZ_R3S_BITCLK
AZ_R3S_SYNC
AZ_R3S_RST#
AZ_R3S_SDIN0
AZ_R3S_SDOUT
R4910
R4903
R4901
R4905
R4869
33_5%_2
HDA_SDO_R
R4807
R4886
R4891
51_5%_2
R4807,R4886,R4891
CAN BE OPENED FOR POWER CONSUMPTION
H_TRST#
R4808
51_5%_2_DY
PCH_TCK
PCH_TDI
PCH_TDO
PCH_TMS
PCH_JTAG
TP30
TP4569
TP4566
TP4567
TP4568
P3V3_RTC
R4831
1M_5%_2
Q4831
SSM3K7002BFU
WWAN_DET#
INTRUDER#
P3V3A
R4861
1K_5%_2
BAT_GRNLED#
R4863
10K_5%_2
Q4755
LES_LBSS84LT1G_SOT23_3P
BUF_PLT_RST#
Q4754
LES_LBSS84LT1G_SOT23_3P
HDA_SDO_R
SATA_RX0_C_DN
SATA_RX0_C_DP
SATA_TX0_C_DN
SATA_TX0_C_DP
SATA_RX1_C_DN
SATA_RX1_C_DP
SATA_TX1_C_DN
SATA_TX1_C_DP
PCIE_RX6_L0_C_DN
PCIE_RX6_L0_C_DP
PCIE_TX6_L0_C_DN
PCIE_TX6_L0_C_DP
C4818
C4819
0.1UF_16V_2
R4818
10K_5%_2_DY
R4826
10K_5%_2
AMD_BIOS_SEL#
NMI_SMI_DBG#
GPIO37
R4817
10K_5%_2
MSATA_DET#
P1V05S
L2 MAX. = 100 MILS
L1 MAX. = 500 MILS
R4852
3K_1%_2
R4816
10K_5%_2
LED_3S_SATA#
P3V3S
R4765
10K_5%_2
R4820
43.2K_1%_2
R4824
10K_5%_2_DY
AMD_BIOS_SEL# O 1GB
AMD_BIOS_SEL# 1 2GB
LAYOUT NOTE:PLACE R4808 NEAR PCH
LAYOUT NOTE:JTAG_TMS TERMINATIONS NEED TO BE PLACED NEAR PCH
LAYOUT NOTE:JTAG_TDI TERMINATIONS NEED TO BE PLACED NEAR PCH
LAYOUT NOTE:JTAG_TDO TERMINATIONS NEED TO BE PLACED NEAR XDP
REFERENCE:4500~4949
INVENTEC
TITLE
MODEL,PROJECT,FUNCTION
MCP7-RTC,AUDIO,SATA
SIZE A3
CODE CS
DOC.NUMBER 1310xxxxx-0-0
REV X01
CHANGE by XXX
DATE 21-OCT-2002
SHEET 33 of 77

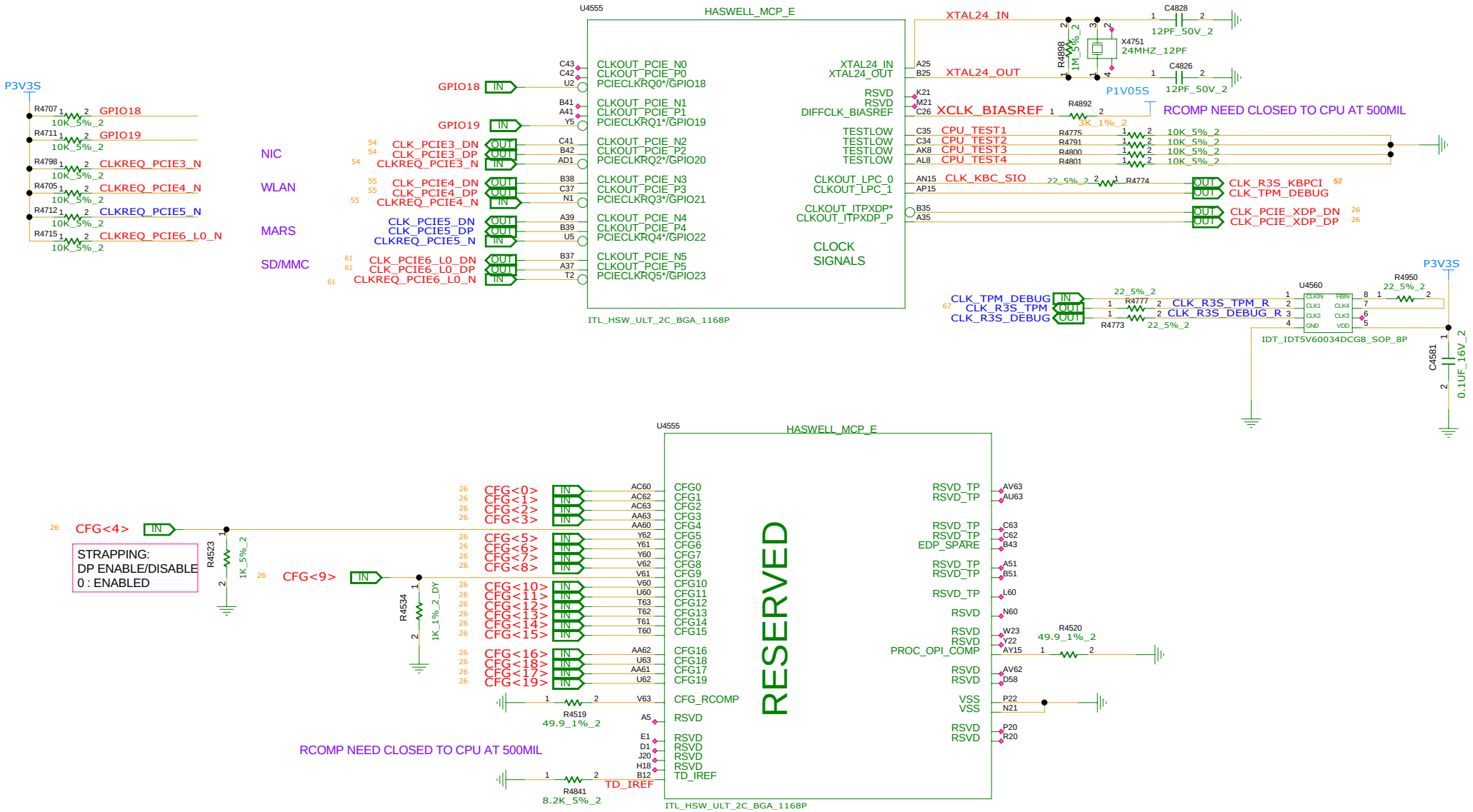

INVENTEC

TITLE: MODEL,PROJECT,FUNCTION
MCP8-CLOCK,RESERVED

SIZE	CODE	DOC.NUMBER	REV
A3	CS	1310xxxxx-0-0	X01

CHANGE by XXX | DATE 21-OCT-2002 | SHEET 34 of 77

REFERENCE:4500~4949

www.indiafix.in

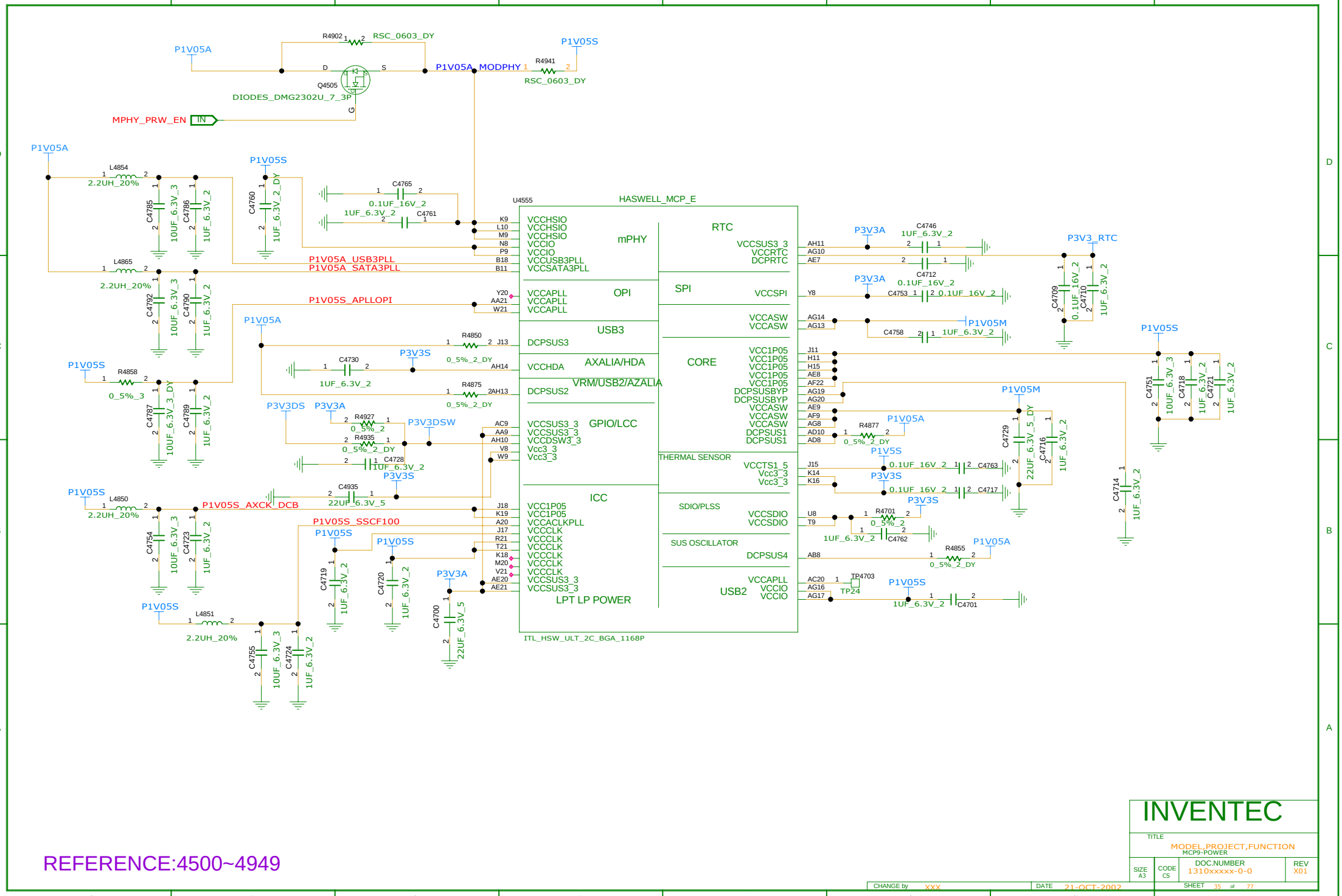

REFERENCE:4500~4949

INVENTEC

TITLE
MODEL,PROJECT,FUNCTION
MCP9-POWER

SIZE	CODE	DOC.NUMBER	REV
A3	CS	1310xxxxx-0-0	X01

CHANGE by XXX DATE 21-OCT-2002 SHEET 35 of 77

ROUTE VCCSENSE WITH 27.4OHM IMPEDANCE

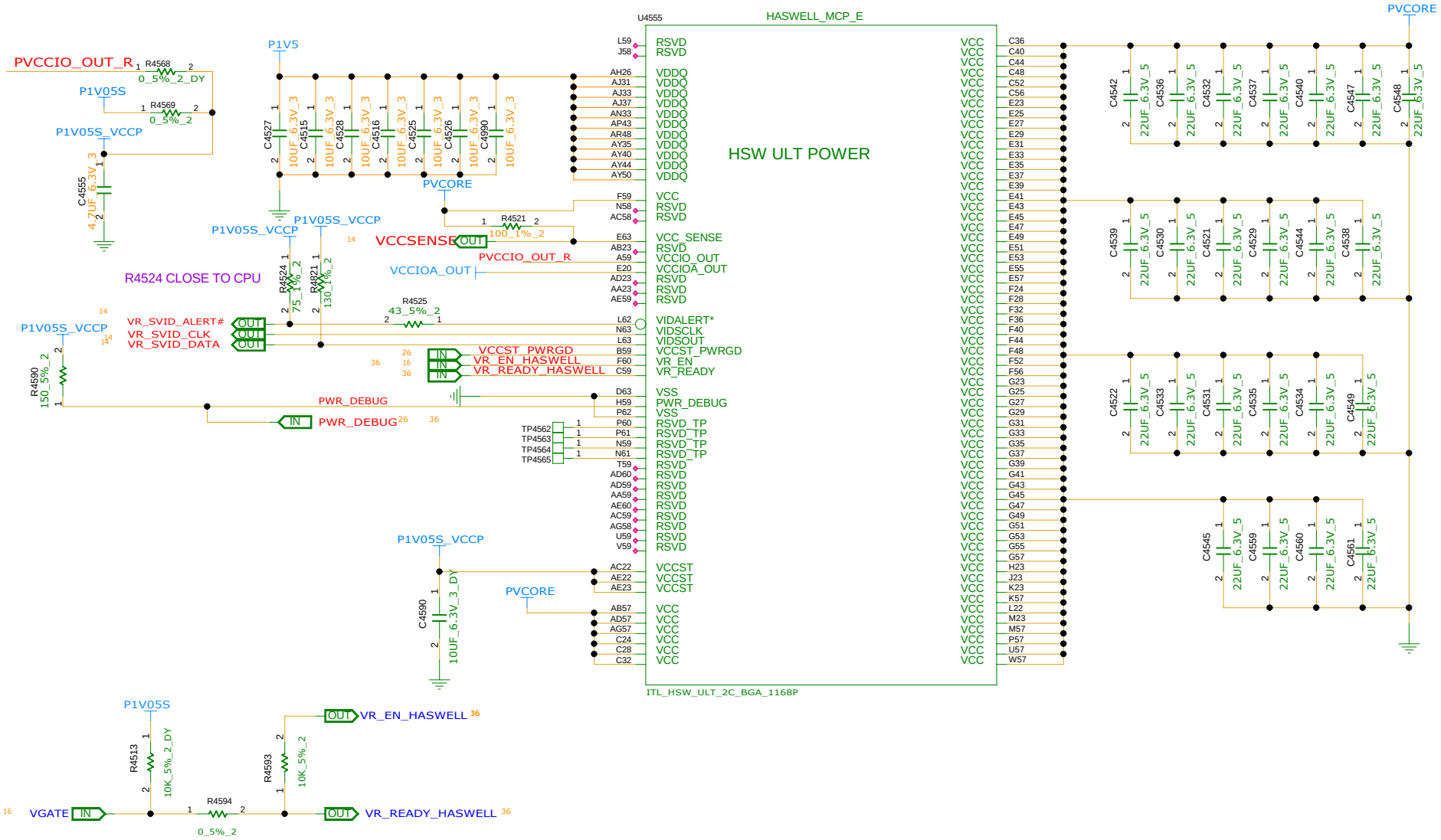

REFERENCE:4500~4949

INVENTEC

TITLE
MODEL,PROJECT,FUNCTION
MCP10-POWER

SIZE	CODE	DOC.NUMBER	REV
A3	CS	1310xxxxx-0-0	X01

CHANGE by XXX DATE 21-OCT-2002 SHEET 36 of 77

www.indiafix.in

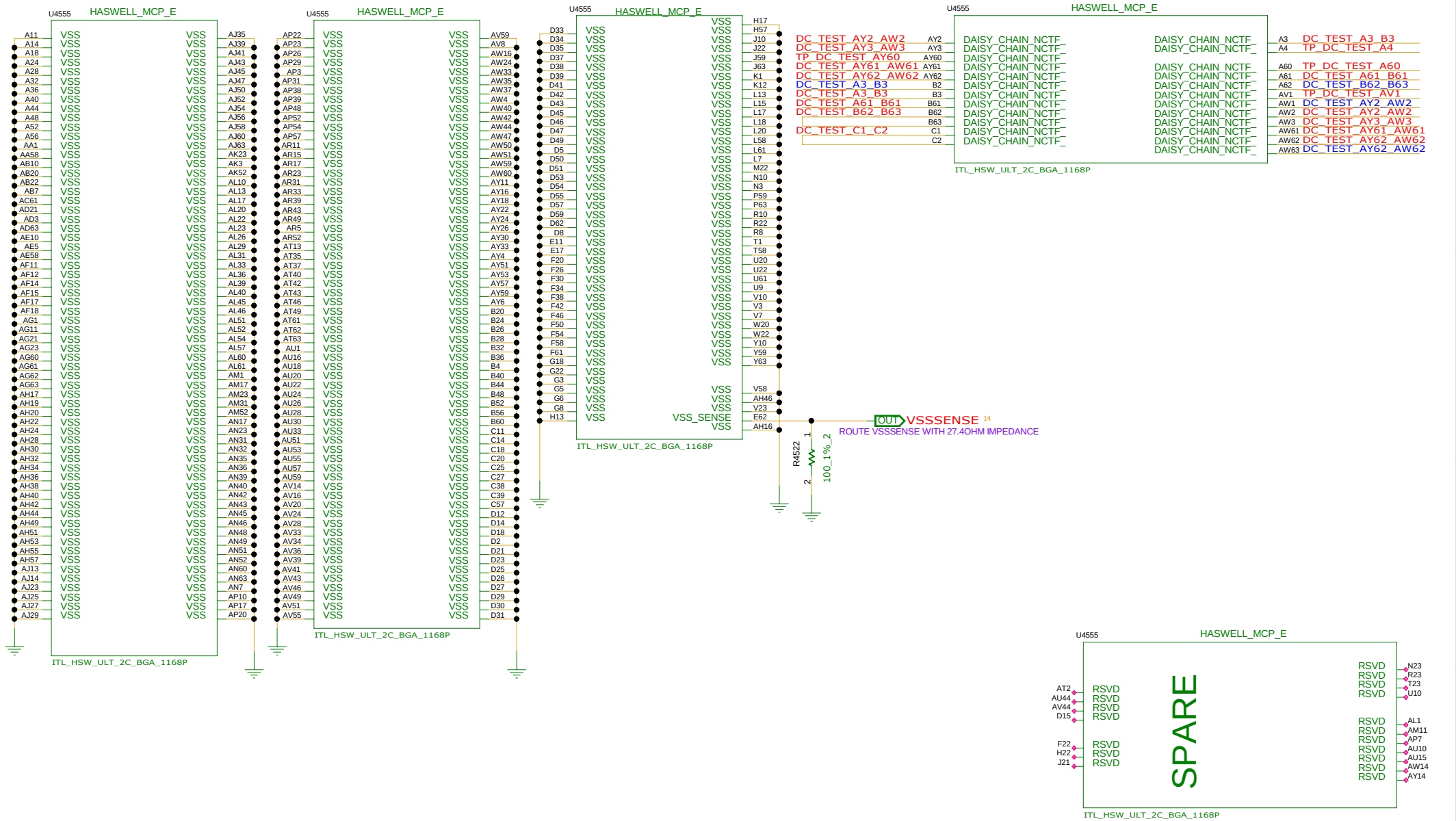

REFERENCE:4500~4949

INVENTEC

TITLE
MODEL,PROJECT,FUNCTION
MCP11-GND,DAISY CHAIN,RESERVE

SIZE	CODE	DOC.NUMBER	REV
A3	CS	1310xxxxx-0-0	X01

CHANGE by XXX DATE 21-OCT-2002 SHEET 37 of 77

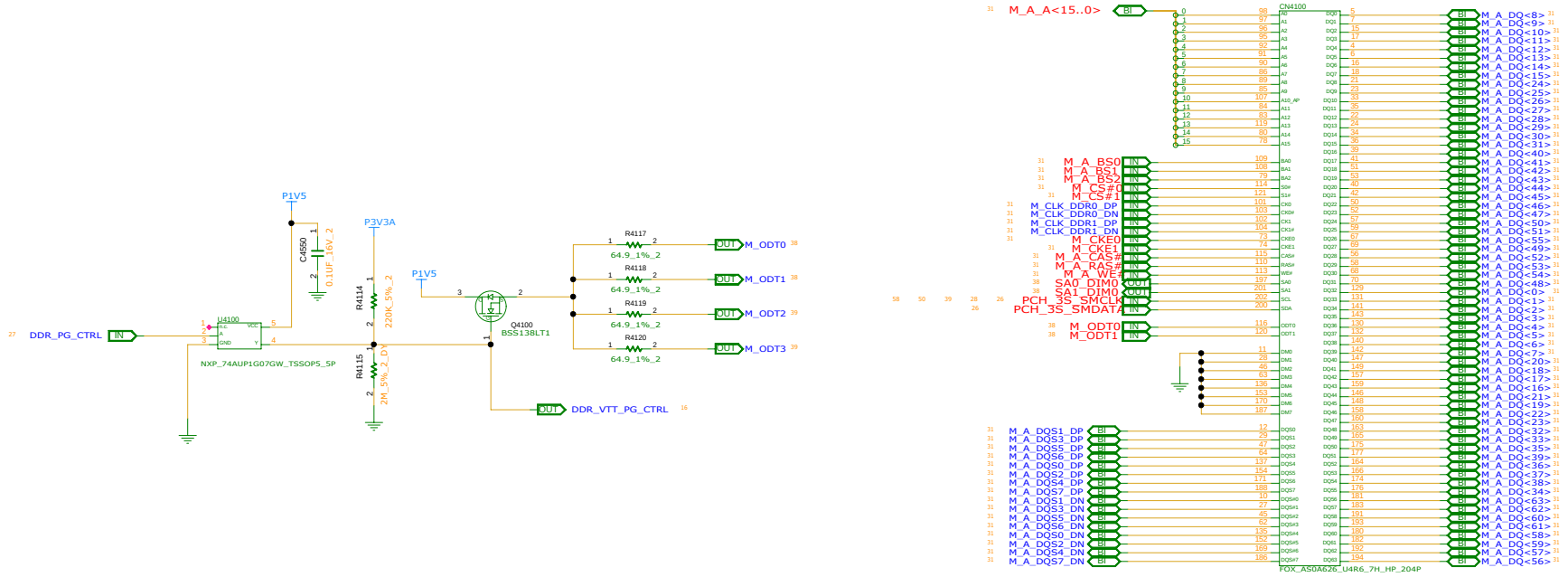

NOTE:

IF SA0_DIMO=0 , SA1_DIMO=0
SO-DIMMA SPD ADDRESS IS 0XA0
SO-DIMMA TS ADDRESS IS 0X30

IF SA0_DIMO=1 , SA1_DIMO=0
SO-DIMMA SPD ADDRESS IS 0XA2
SO-DIMMA TS ADDRESS IS 0X32

REFERENCE NUMBER:4100~4299

INVENTEC

TITLE: MODEL,PROJECT,FUNCTION
DDR3_SO-DIMM0

SIZE	CODE	DOC.NUMBER	REV
C	CS	1310xxxxx-0-0	X01

SHEET 38 of 72

CHANGE by XXX DATE 21-OCT-2002

www.indiafix.in

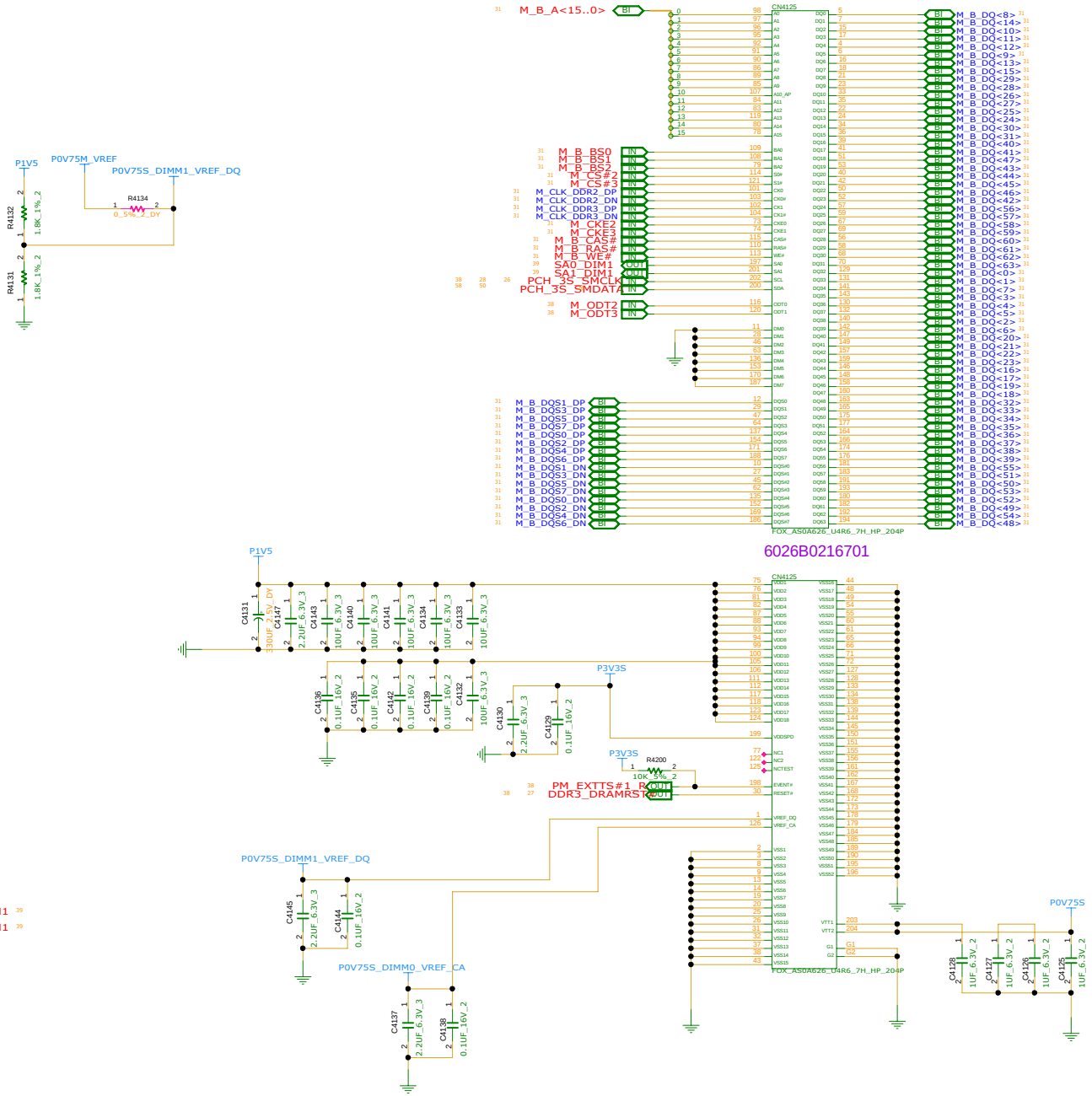

NOTE:
SO-DIMMB SPD ADDRESS IS 0XA4
SO-DIMMB TS ADDRESS IS 0X34

REFERENCE NUMBER:4100~4299

INVENTEC

TITLE: MODEL,PROJECT,FUNCTION
DDR3_SO-DIMM0

SIZE	CODE	DOC.NUMBER	REV
C	CS	1310xxxxx-0-0	X01

CHANGE by XXX DATE 21-OCT-2002 SHEET 39 of 72

RESERVED

INVENTEC

TITLE
MODEL,PROJECT,FUNCTION
DPB DEMUX1 TO DP

SIZE	CODE	DOC.NUMBER	REV
A3	CS	1310xxxxx-0-0	X01

CHANGE by XXX DATE 21-OCT-2002 SHEET 40 of 77

www.indiafix.in

RESERVED

INVENTEC

TITLE
MODEL,PROJECT,FUNCTION
DPC DEMUX2 TO VGA

SIZE	CODE	DOC.NUMBER	REV
A3	CS	1310xxxxx-0-0	X01

CHANGE by XXX DATE 21-OCT-2002 SHEET 41 of 77

	3393	3355
PIN 2	R3062 C3069 C3070	R3061
PIN 5	R3065	R3063 C3077
PIN 8		C3061 C3062
PIN 11	C3073	
PIN 14	R3064 C3074	R3080
PIN 15		R3078
PIN 16		R3067
PIN 17		R3079
PIN 27	L3066 C3087	
PIN 35	C3068	R3081
PIN 36	R3077	
PIN 37	R3074	R3076
PIN 38	10K_DY	R3075 C3090 C3091
PIN 39		L3068 C3092
PIN 40		R3092

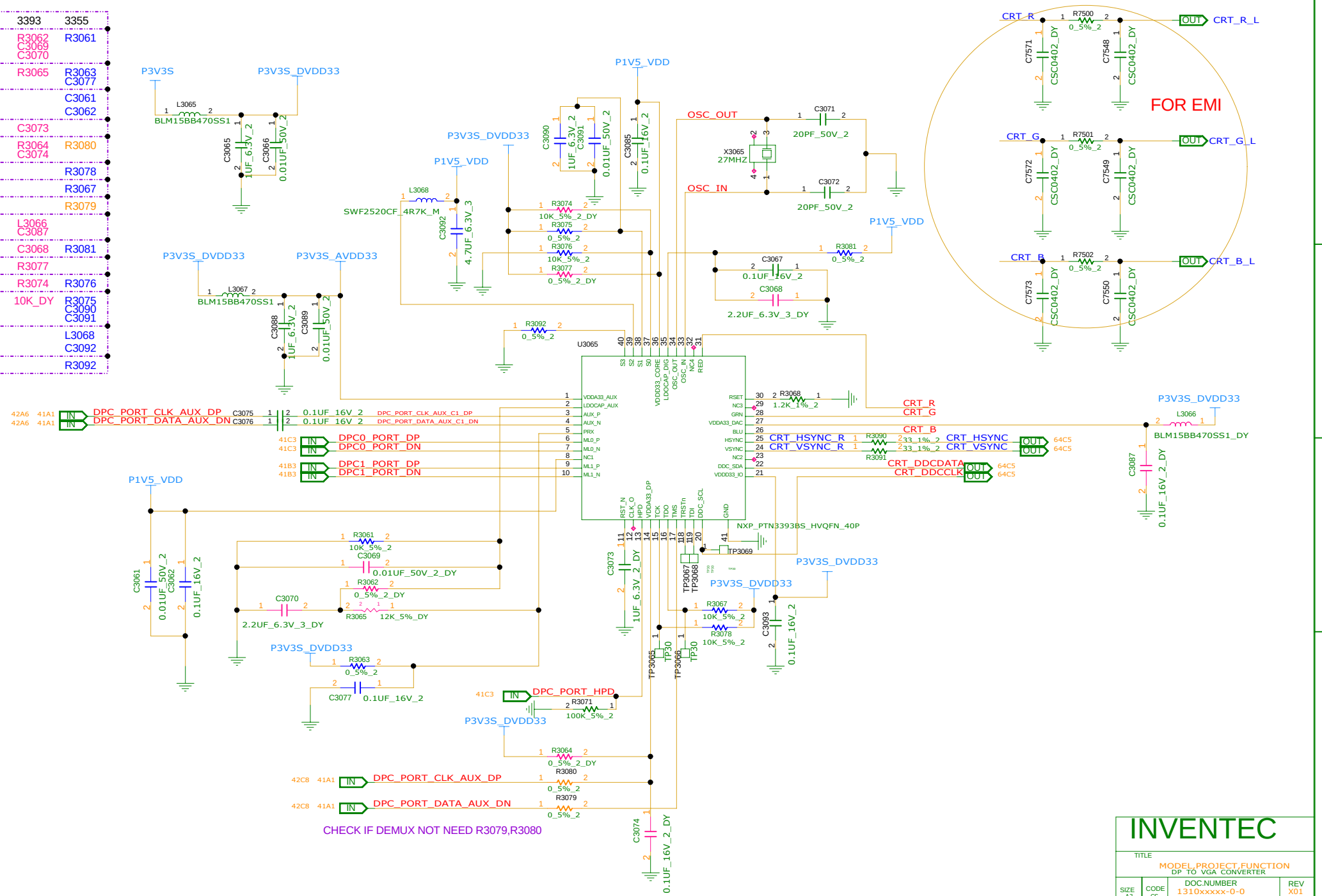

INVENTEC

TITLE: MODEL,PROJECT,FUNCTION
DP TO VGA CONVERTER

SIZE	CODE	DOC.NUMBER	REV
A3	CS	1310xxxxx-0-0	X01

CHANGE by XXX | DATE 21-OCT-2002 | SHEET 42 of 77

www.indiafix.in

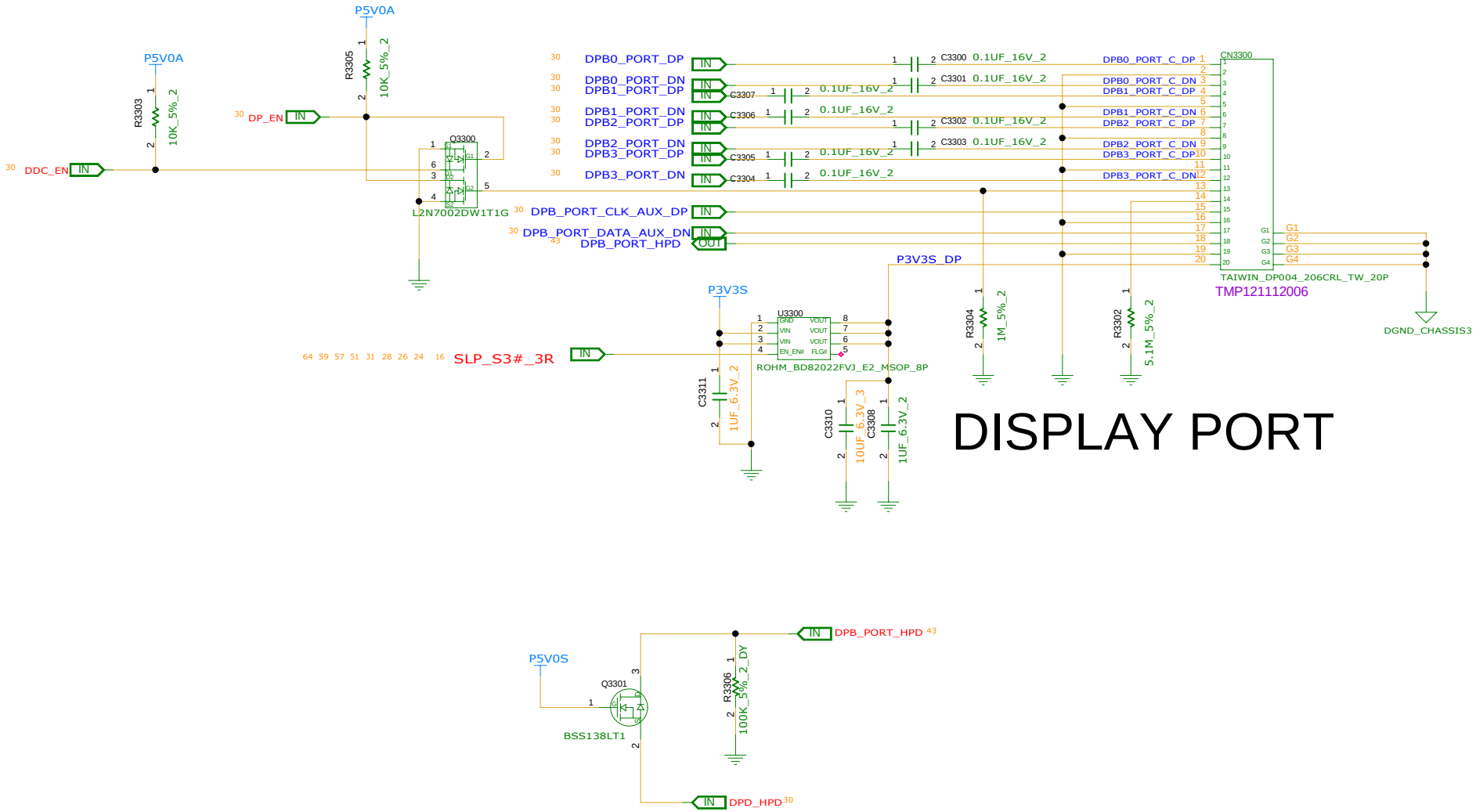

REFERENCE NUMBER:3300~3399

INVENTEC

TITLE
MODEL,PROJECT,FUNCTION
CRT & DP

SIZE	CODE	DOC.NUMBER	REV
A3	CS	1310xxxxx-0-0	X01

CHANGE by XXX DATE 21-OCT-2002 SHEET 43 of 77

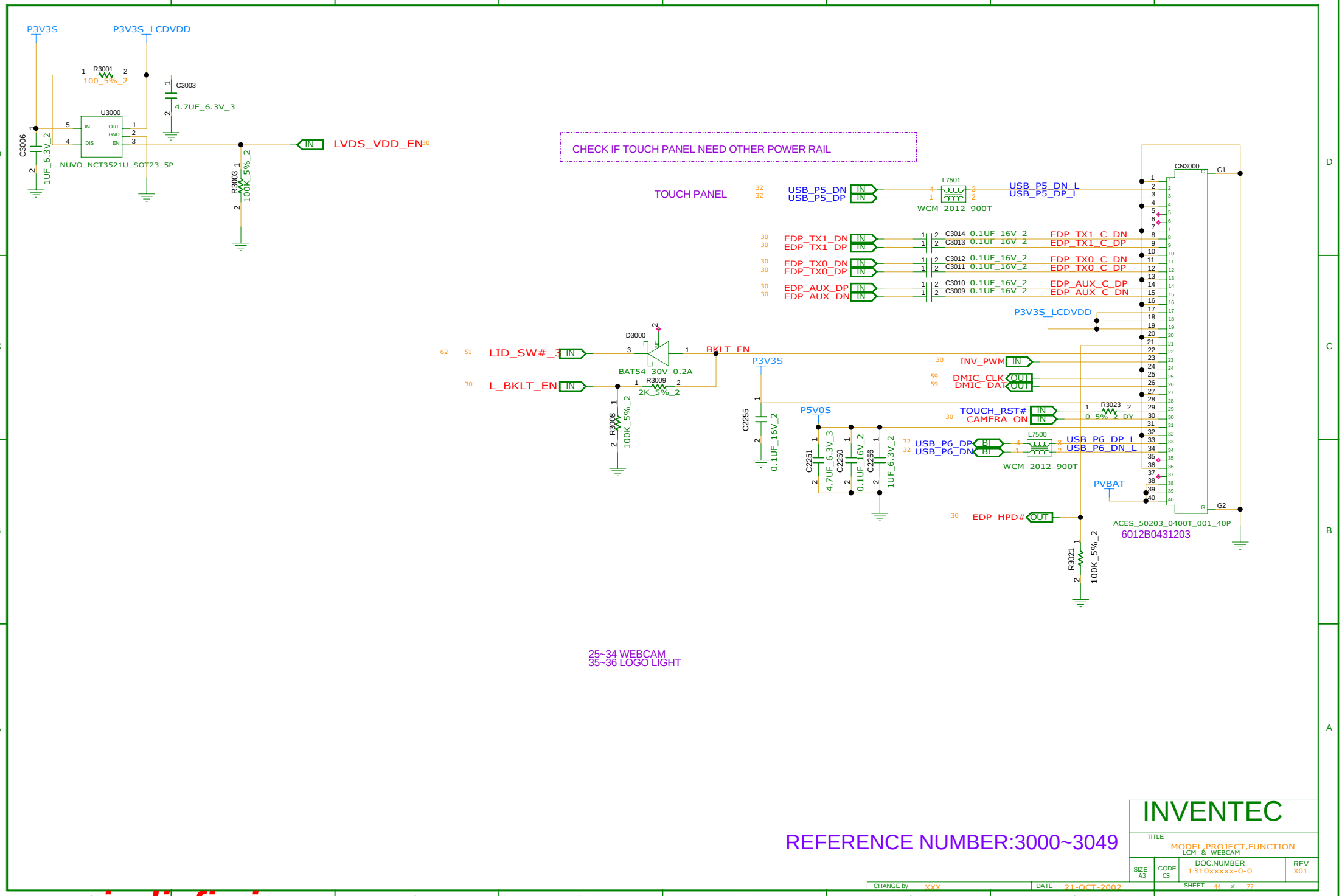

www.indiafix.in

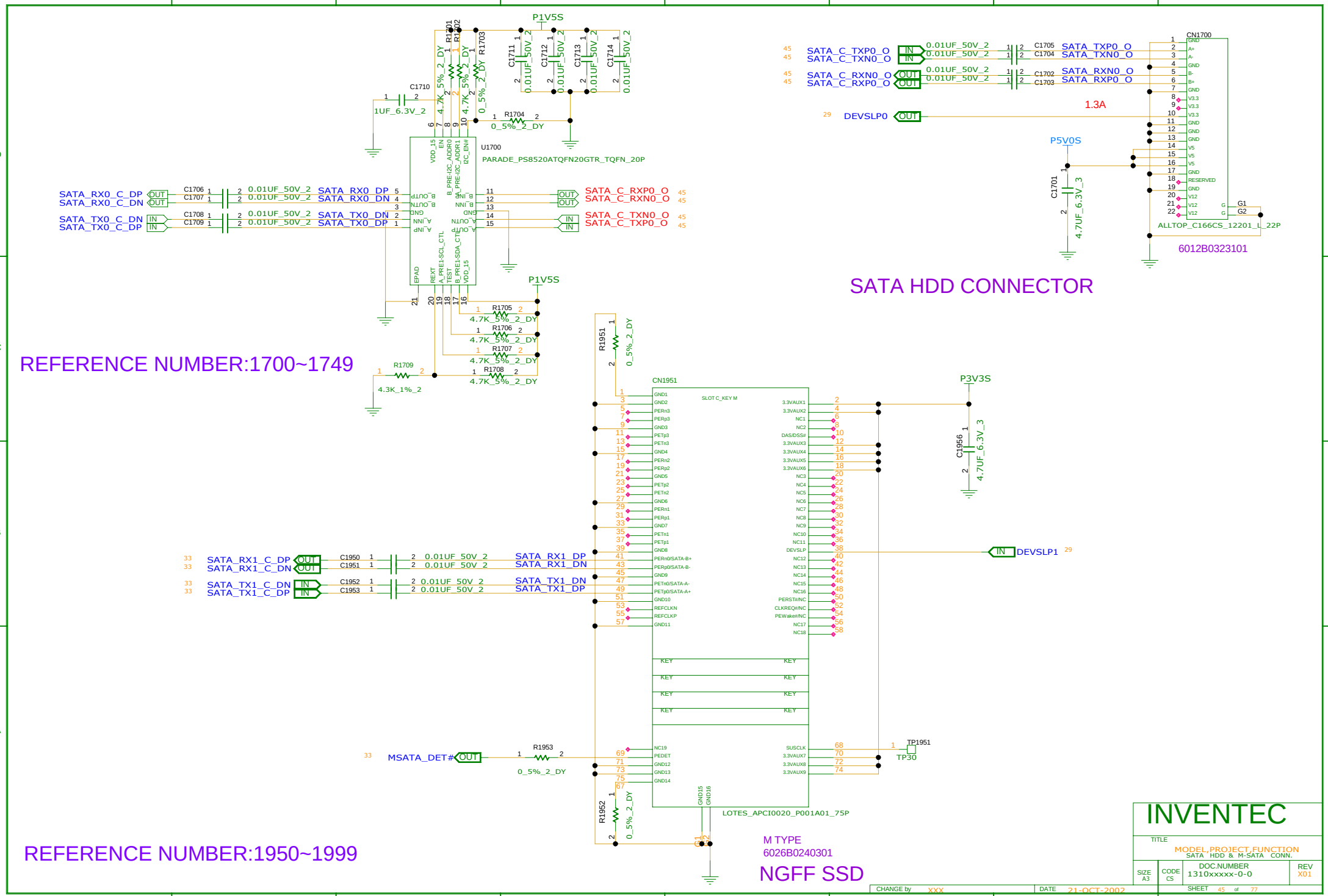
P1V5S
U1700
PARADE_PS8520ATQFN20GTR_TQFN_20P
SATA_RX0_C_DP
SATA_RX0_C_DN
SATA_TX0_C_DN
SATA_TX0_C_DP
SATA_RX0_DP
SATA_RX0_DN
SATA_TX0_DN
SATA_TX0_DP
SATA_C_RXP0_O
SATA_C_RXN0_O
SATA_C_TXN0_O
SATA_C_TXP0_O
REFERENCE NUMBER:1700~1749
SATA_C_TXP0_O
SATA_C_TXN0_O
SATA_C_RXN0_O
SATA_C_RXP0_O
SATA_TXP0_O
SATA_TXN0_O
SATA_RXN0_O
SATA_RXP0_O
DEVSLP0
1.3A
P5V0S
CN1700
ALLTOP_C166CS_12201_L_22P
6012B0323101
SATA HDD CONNECTOR
CN1951
SLOT C_KEY M
P3V3S
DEVSLP1
SATA_RX1_C_DP
SATA_RX1_C_DN
SATA_TX1_C_DN
SATA_TX1_C_DP
SATA_RX1_DP
SATA_RX1_DN
SATA_TX1_DN
SATA_TX1_DP
MSATA_DET#
TP1951
TP30
LOTES_APCI0020_P001A01_75P
M TYPE
6026B0240301
NGFF SSD
REFERENCE NUMBER:1950~1999
INVENTEC
TITLE
MODEL,PROJECT,FUNCTION
SATA HDD & M-SATA CONN.
SIZE A3
CODE CS
DOC.NUMBER 1310xxxxx-0-0
REV X01
SHEET 45 of 77
CHANGE by XXX
DATE 21-OCT-2002

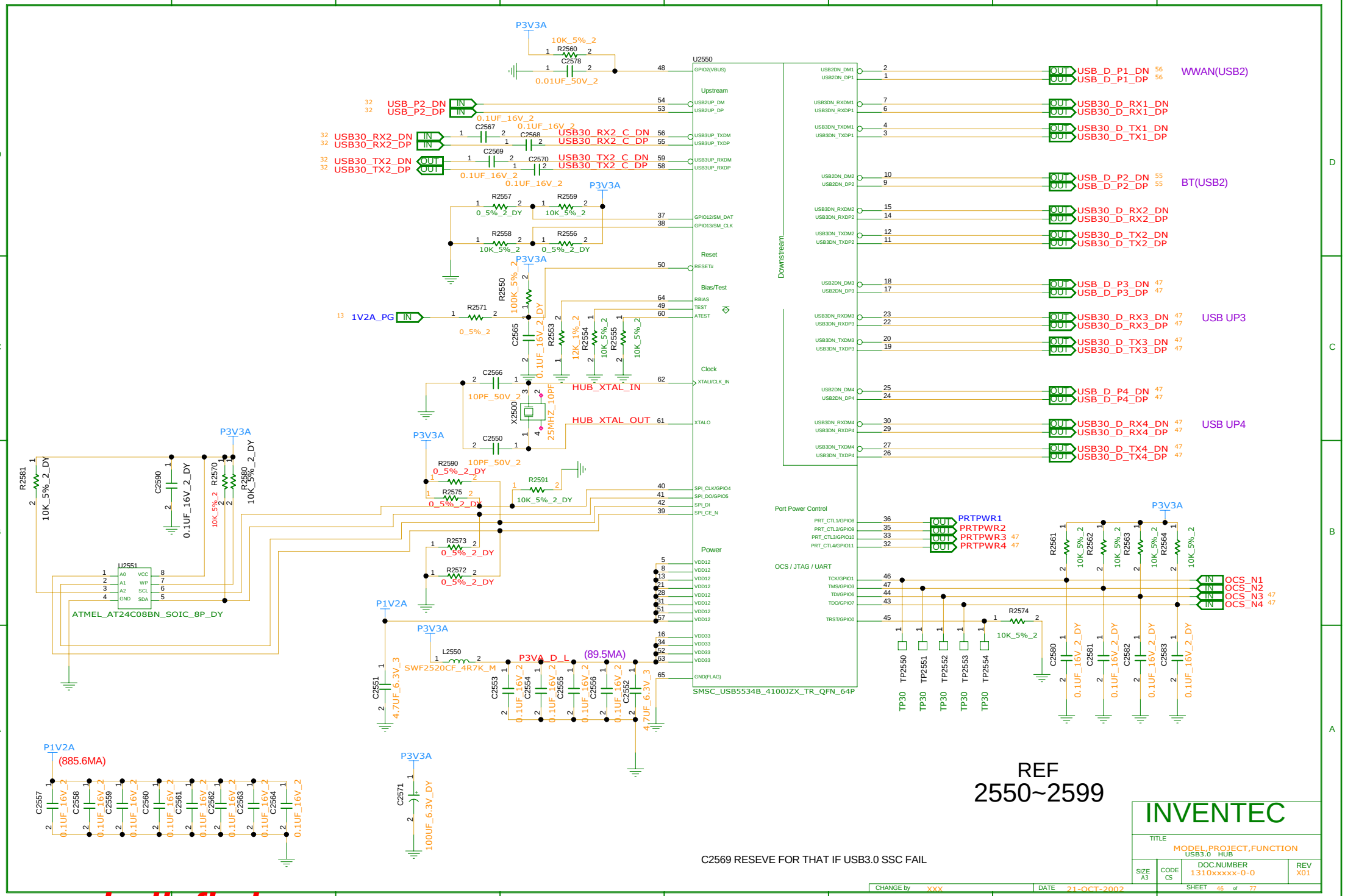

C2569 RESEVE FOR THAT IF USB3.0 SSC FAIL

www.indiafix.in

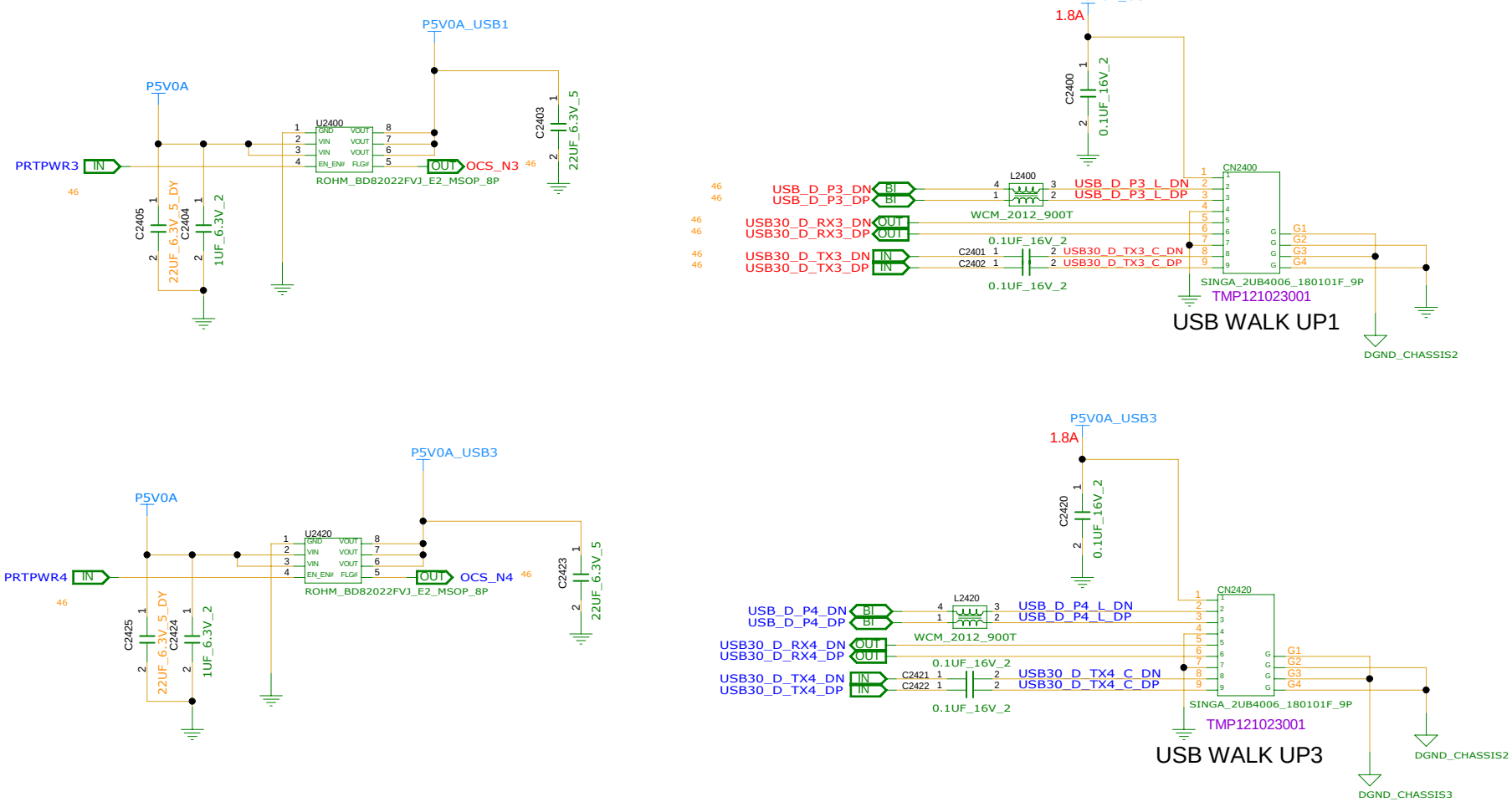

REFERENCE NUMBER:2400~2499

INVENTEC

TITLE
MODEL,PROJECT,FUNCTION
USB & USB CHARGER

SIZE	CODE	DOC.NUMBER	REV
A3	CS	1310xxxxx-0-0	X01

CHANGE by XXX DATE 21-OCT-2002 SHEET 47 of 77

	R2511	R2515	R2514
TPS2543	20K	10K	NI
TPS2540/A PI5USB2543	NI	NI	0

REFERENCE NUMBER:2500~2599

P5V0A_USB2
C2413 22UF_6.3V_5
DGND_USB

P5V0DS_DB
SLP_S4#_3R_DB IN
U2410 GND VIN EN_EN# VOUT VOUT FLG#
ROHM_BD82022FVJ_E2_MSOP_8P
C2415 22UF_6.3V_5_DY
C2414 1UF_6.3V_2

R2512 17.8K_1%_2
R2511 20K_5%_2
DGND_USB DGND_USB

P5V0DS_DB
R2515 10K_5%_2
C2513 0.1UF_16V_2
DGND_USB

P5V0A_USB_CHARGE
2.5A
C2512 100UF_6.3V
DGND_USB

U2511 PWPD ILIM_HI ILIM_LO GND FAULT# IN DM_OUT DP_OUT ILIM_SET OUT DM_IN DP_IN STATUS# EN CTL1 CTL2 CTL3
TEXAS_TPS2546RTER_QFN_16P

USB_P3_DN_DB BI
USB_P3_DP_DB BI
USB_P3_CH_DN_DB BI
USB_P3_CH_DP_DB BI

R2514 0_5%_2_DY
P5V0DS_DB
C2514 0.1UF_16V_2
DGND_USB

CPPWR_EN_DB IN
SLP_S4#_3R_DB 64 IN
SLP_S3#_3R_DB 64 IN

P5V0A_USB_CHARGE
C2503 0.1UF_16V_2
DGND_USB

P5V0A_USB2
1.8A
C2410 0.1UF_16V_2
DGND_USB

USB_P1_DN_DB 64 BI
USB_P1_DP_DB 64 BI
L2410 WCM_2012_900T
USB_P1_L_DN_DB
USB_P1_L_DP_DB
CN2410

USB30_RX1_DN_DB 64 OUT
USB30_RX1_DP_DB 64 OUT
0.1UF_16V_2
USB30_TX1_DN_DB 64 IN
USB30_TX1_DP_DB 64 IN
C2411 C2412 0.1UF_16V_2
USB30_TX1_C_DN_DB
USB30_TX1_C_DP_DB
G1 G2 G3 G4
SINGA_2UB4006_180101F_9P
TMP121023001
DGND_USB DGND_USB

S3051 SCREW300_600_1P
S3052 SCREW280_0_0_1P
S3050 SCREW300_600_1P
S3053 SCREW280_0_0_1P
DGND_USB

USB_P3_CH_DN_DB BI
USB_P3_CH_DP_DB BI
L2500 WCM_2012_900T
USB_P3_L_DN_DB
USB_P3_L_DP_DB

USB30_RX3_DN_DB OUT
USB30_RX3_DP_DB OUT
0.1UF_16V_2
USB30_TX3_DN_DB IN
USB30_TX3_DP_DB IN
C2500 C2501 0.1UF_16V_2
USB30_TX3_C_DN_DB
USB30_TX3_C_DP_DB

CN2500
G1 G2 G3 G4
SINGA_2UB4006_180101F_9P
TMP121023001
USB CHARGER
DGND_USB DGND_USB

64 CRT_R_DB IN
64 CRT_G_DB IN
64 CRT_B_DB IN
L3051 120NH,5%
L3052 120NH,5%
L3053 120NH,5%
VGA_R_L2_DB
VGA_G_L2_DB
VGA_B_L2_DB

R3051 75_1%_2
R3052 75_1%_2
R3053 75_1%_2
C3051 12PF_50V_2
C3052 12PF_50V_2
C3053 12PF_50V_2
C3054 12PF_50V_2
C3055 12PF_50V_2
C3056 12PF_50V_2
DGND_USB

P5V0S_CRTVDD
R3059 4.7K_5%_2
R3060 4.7K_5%_2

CRT_DDCDATA_DB BI
CRT_HSYNC_DB BI
CRT_VSYNC_DB BI
CRT_DDCCLK_DB BI

CN3050
G1 G2
SUYIN_M195001HR015M205ZR_15P
6012B0503901
DGND_USB DGND_USB

P5V0DS_DB
SLP_S3#_3R_DB IN
64 48
U3051 GND VIN EN_EN# VOUT VOUT FLG#
ROHM_BD82022FVJ_E2_MSOP_8P
C3357 1UF_6.3V_2
DGND_USB

P5V0S_CRTVDD
C3058 0.1UF_16V_2
DGND_USB

FIX2400 FIX_MASK
FIX2401 FIX_MASK
FIX2402 FIX_MASK
FIX2403 FIX_MASK

REFERENCE NUMBER:3050~3099

CRT

INVENTEC

TITLE
MODEL,PROJECT,FUNCTION
USB CONN.

SIZE	CODE	DOC.NUMBER	REV
A3	CS	1310xxxxx-0-0	X01

CHANGE by XXX DATE 21-OCT-2002 SHEET 48 of 77

www.indiafix.in

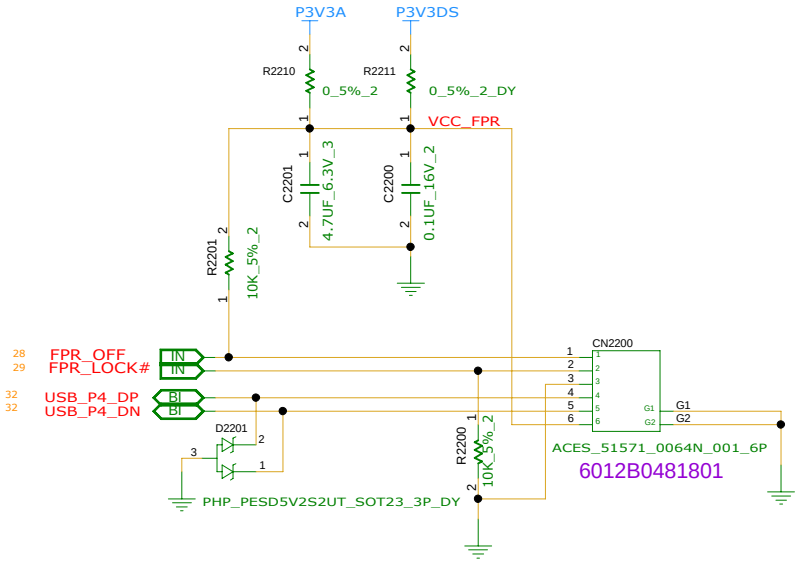

FINGER PRINT CONN

REFERENCE:2200~2249

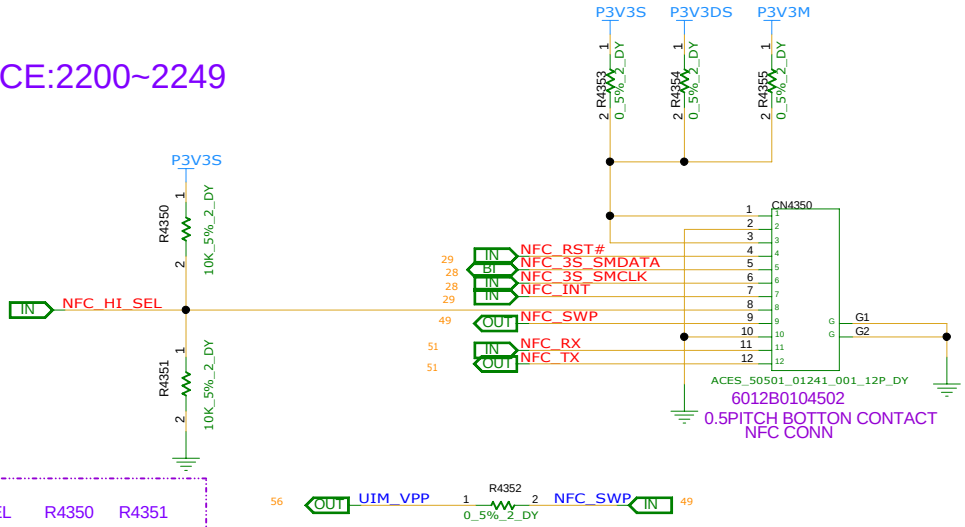

NFC_HI_SEL	R4350	R4351
HIGH (UART)	INSTALL	
LOW (I2C)		INSTALL

REFERENCE:4350~4399

INVENTEC

TITLE
MODEL PROJECT,FUNCTION
FINGER PRINTER & NFC

SIZE	CODE	DOC.NUMBER	REV
A3	CS	1310xxxxx-0-0	X01

CHANGE by XXX DATE 21-OCT-2002 SHEET 49 of 77

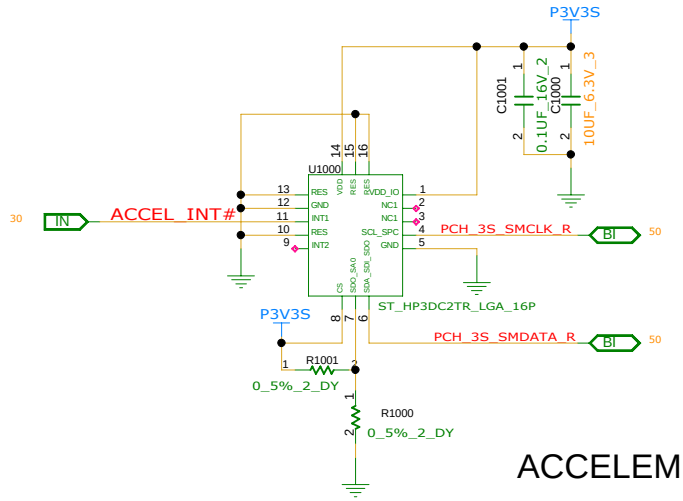

ACCELEMETOR

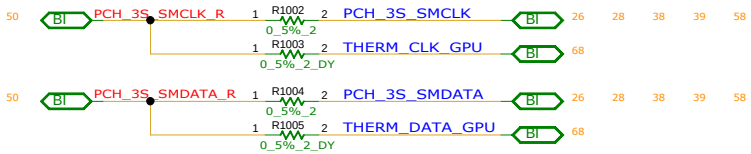

REFERENCE NUMER : 1000~1099

INVENTEC

TITLE
MODEL,PROJECT,FUNCTION
ACCELEMETOR

SIZE	CODE	DOC.NUMBER	REV
A3	CS	1310xxxxx-0-0	X01

CHANGE by XXX DATE 21-OCT-2002 SHEET 50 of 77

www.indiafix.in

REFERENCE NUMER : 300~399

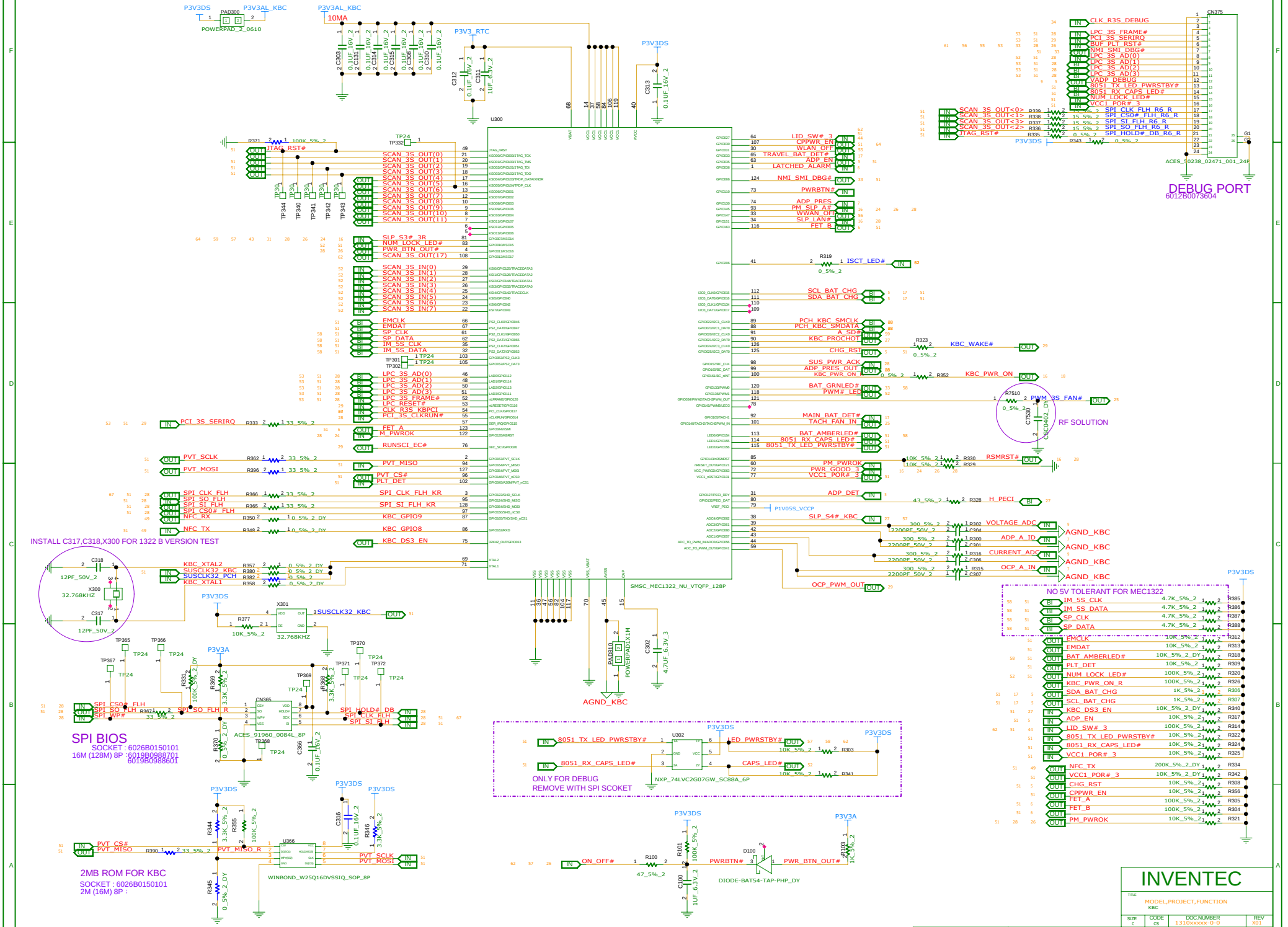

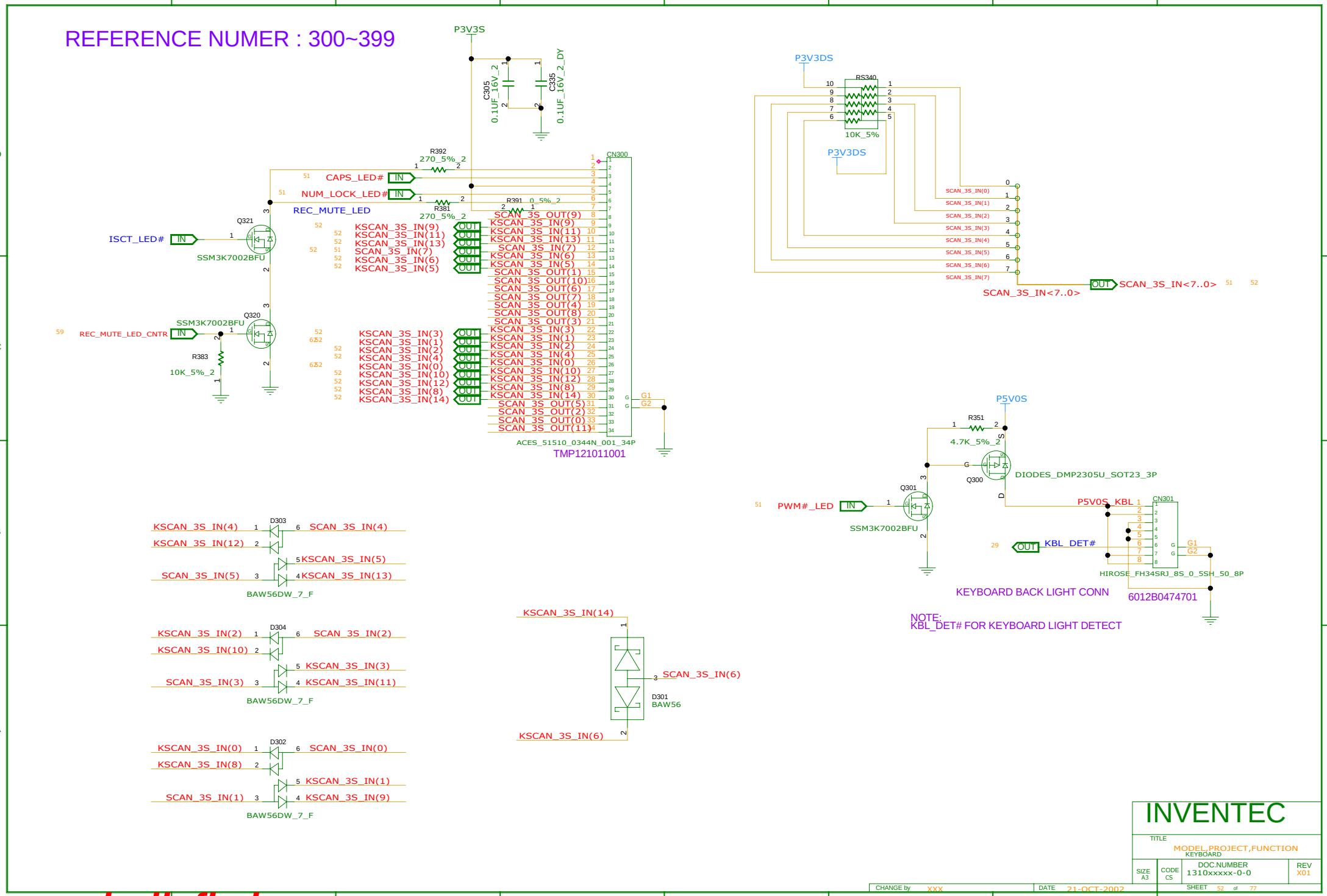

www.indiafix.in

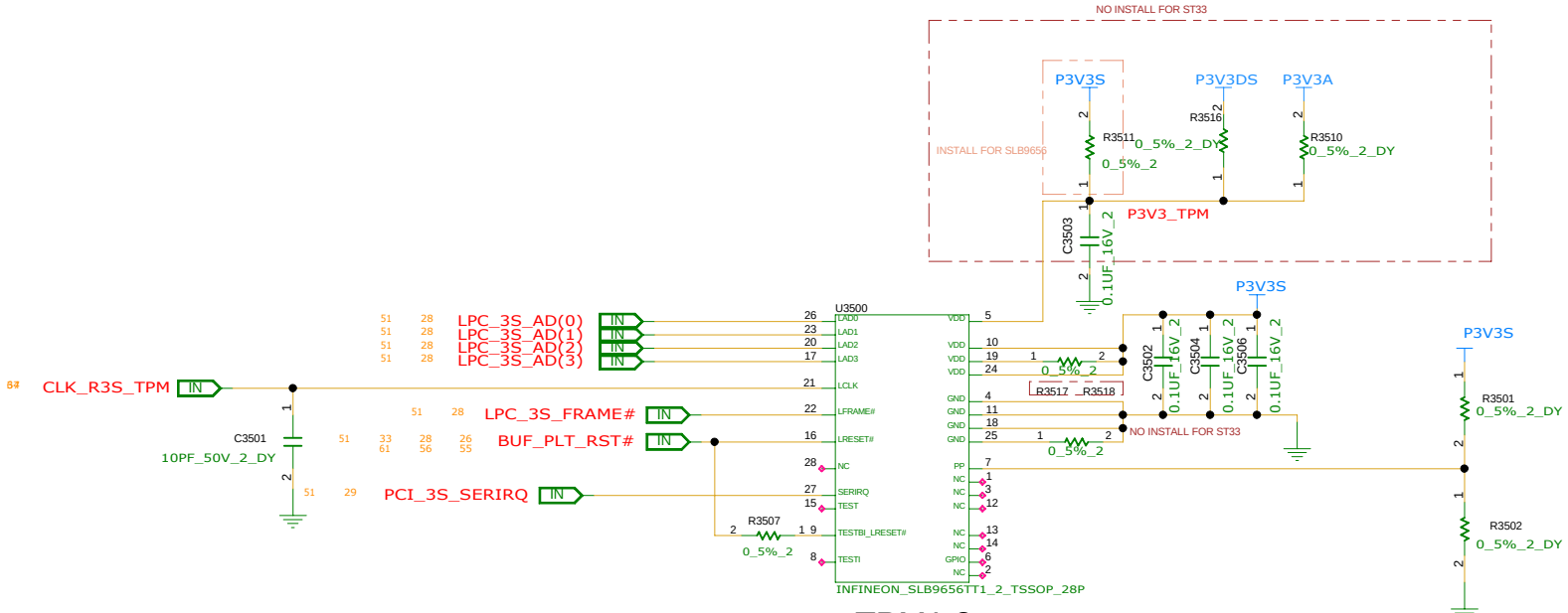

TPM1.2

	SLB9656TT1.2	ST33
C3503	INSTALL	OPEN
R3507	INSTALL	OPEN
R3511	INSTALL	OPEN
R3517	INSTALL	OPEN
R3518	INSTALL	OPEN

REFERENCE NUMER : 3500~3549

INVENTEC

TITLE MODEL,PROJECT,FUNCTION TPM

SIZE	CODE	DOC.NUMBER	REV
A3	CS	1310xxxxx-0-0	X01

CHANGE by XXX DATE 21-OCT-2002 SHEET 53 of 77

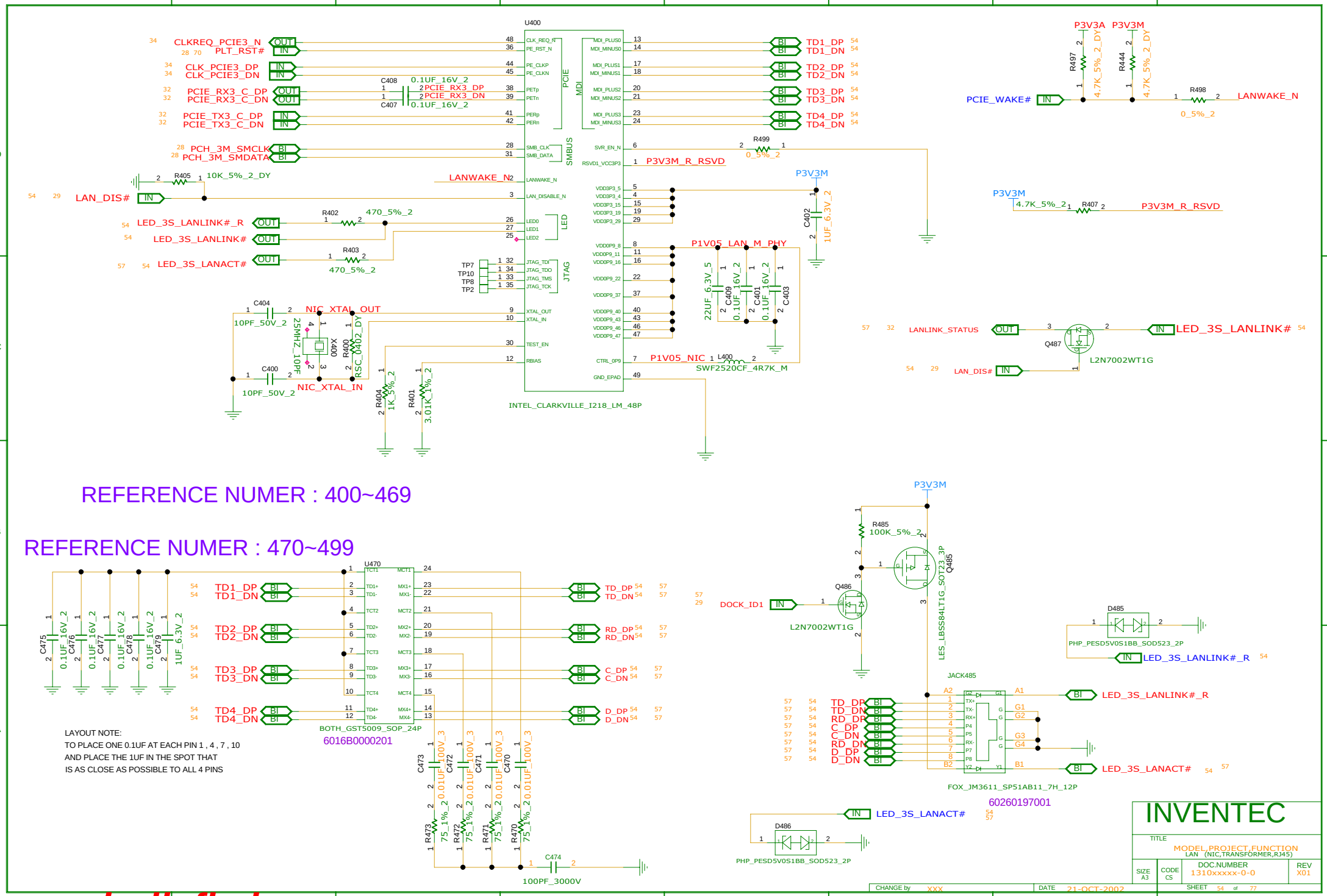

www.indiafix.in

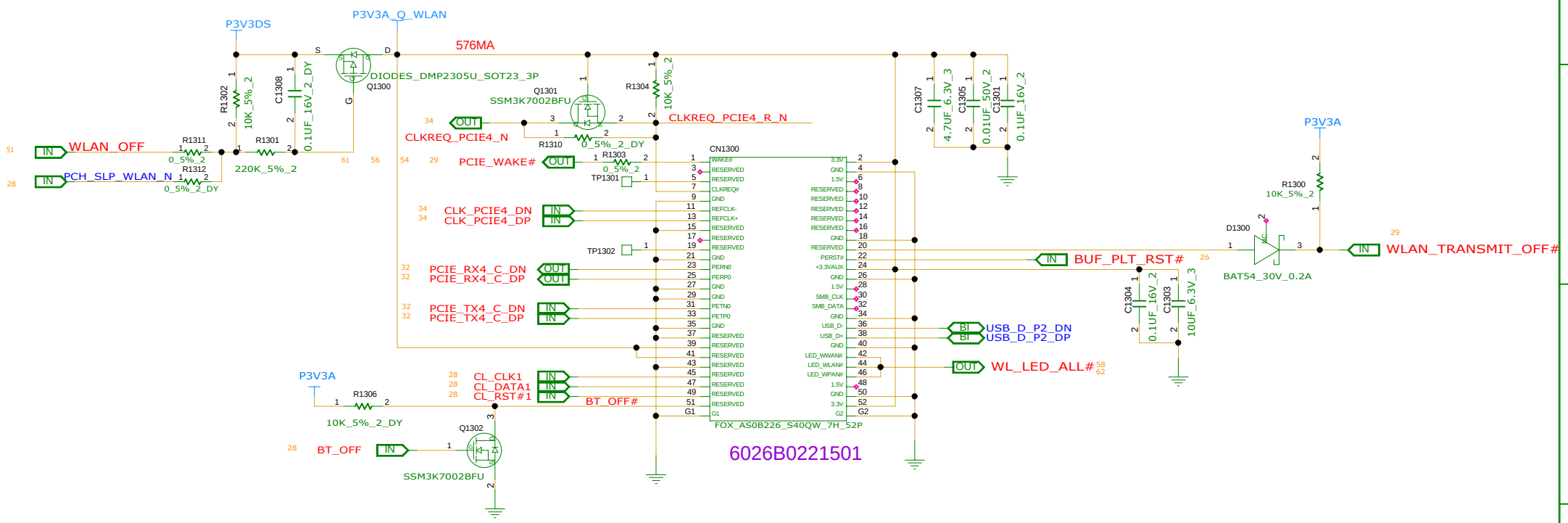

WLAN & BLUE TOOTH

REFERENCE NUMBER:1300~1349

INVENTEC

TITLE
MODEL,PROJECT,FUNCTION
WLAN & BLUE TOOTH

SIZE	CODE	DOC.NUMBER	REV
A3	CS	1310xxxxx-0-0	X01

CHANGE by XXX DATE 21-OCT-2002 SHEET 55 of 77

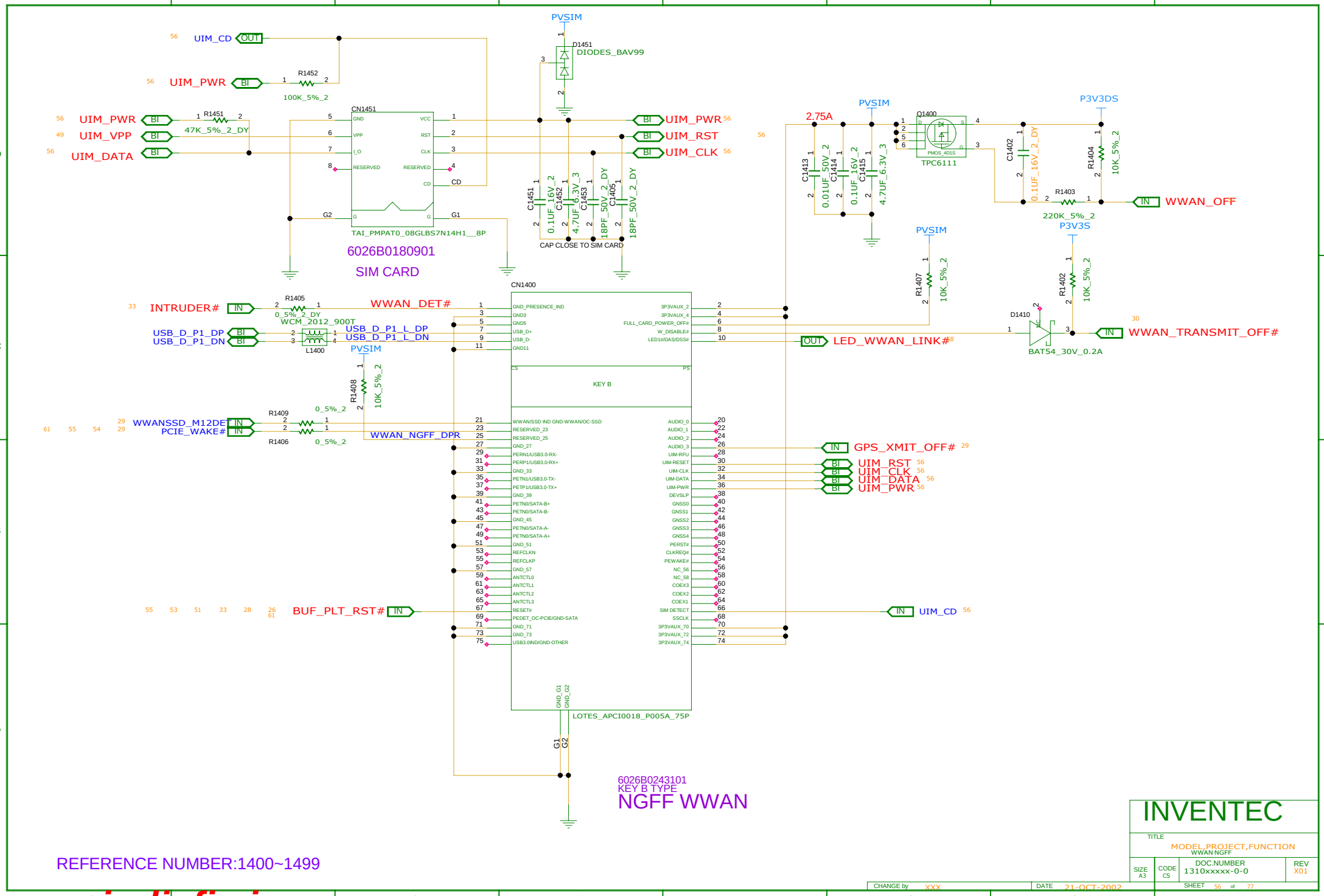

www.indiafix.in

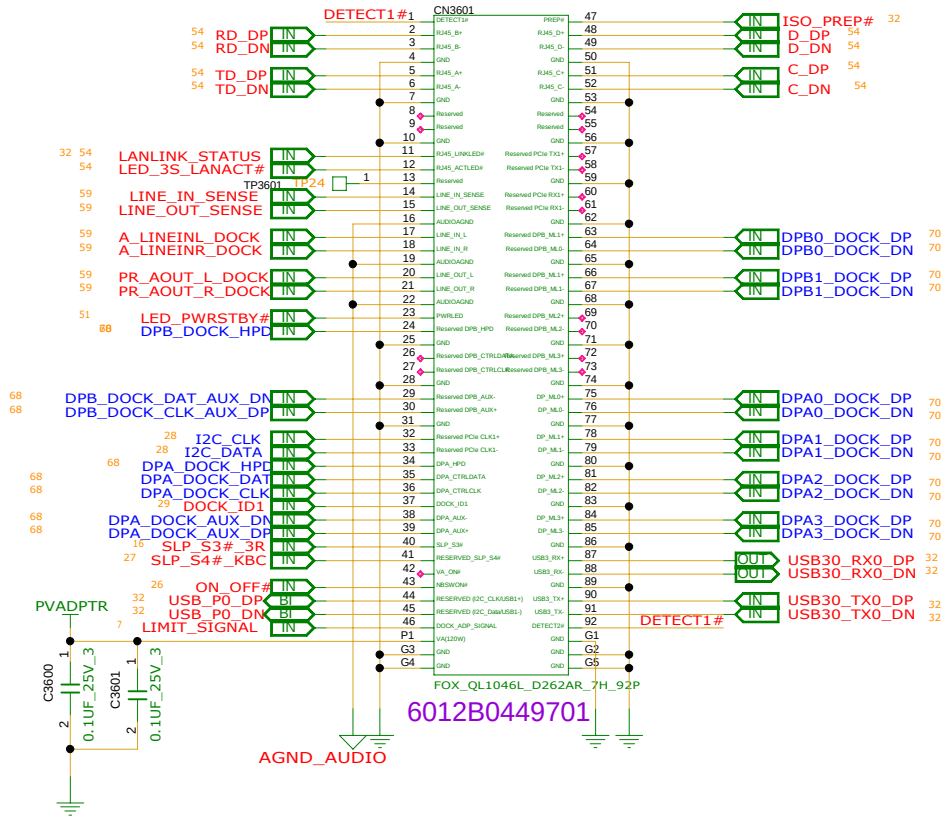

INVENTEC

TITLE
MODEL,PROJECT,FUNCTION
DOCKING CONN.

SIZE	CODE	DOC.NUMBER	REV
A3	CS	1310xxxxx-0-0	X01

CHANGE by XXX | DATE 21-OCT-2002 | SHEET 57 of 77

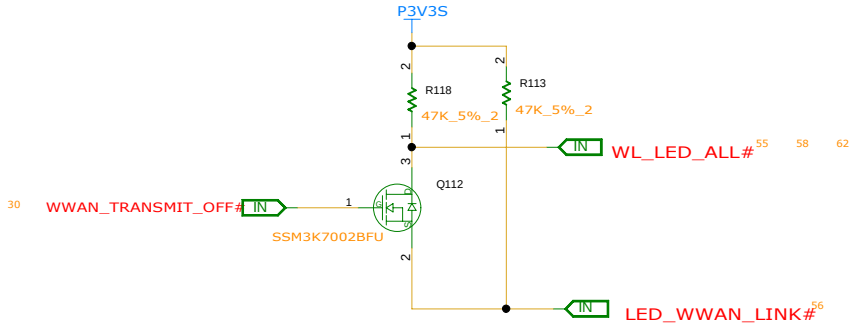

WLAN_WWAN_BLUETOOTH_ LED

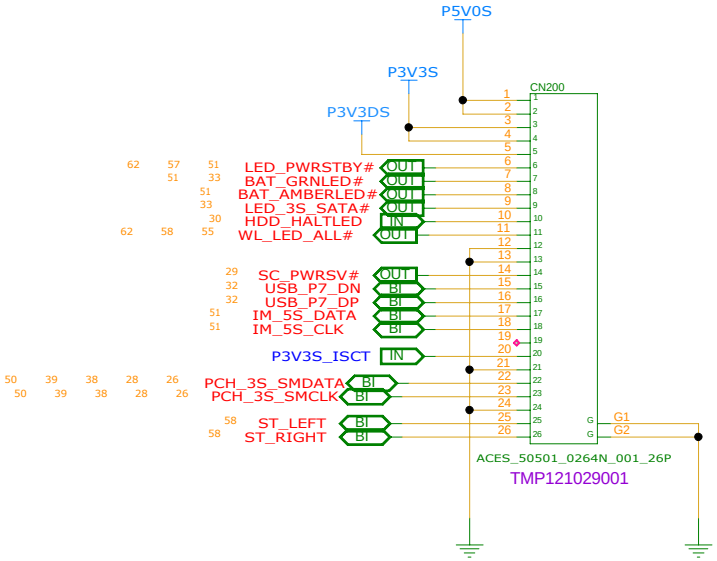

SMART CARD AND TOUCHPAD D/B W TO B CONN

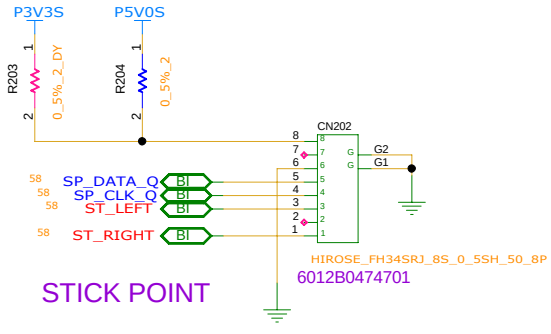

STICK POINT

	5V	3.3V
R201	INSTALL	UNINSTALL
R202	INSTALL	UNINSTALL
R203	UNINSTALL	INSTALL
R204	INSTALL	UNINSTALL

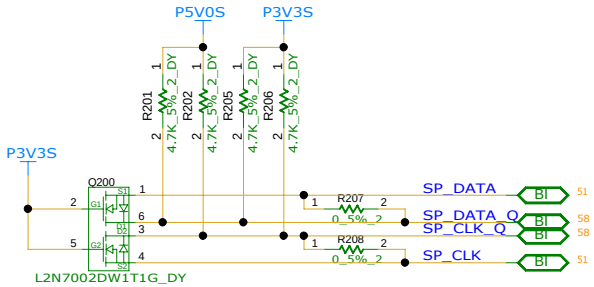

STICK POINT OPTION

REFERENCE NUMBER:100~199

INVENTEC

TITLE
MODEL,PROJECT,FUNCTION
STICK POINT & B2B CNTR

SIZE	CODE	DOC.NUMBER	REV
A3	CS	1310xxxxx-0-0	X01

CHANGE by XXX DATE 21-OCT-2002 SHEET 58 of 77

www.indiafix.in

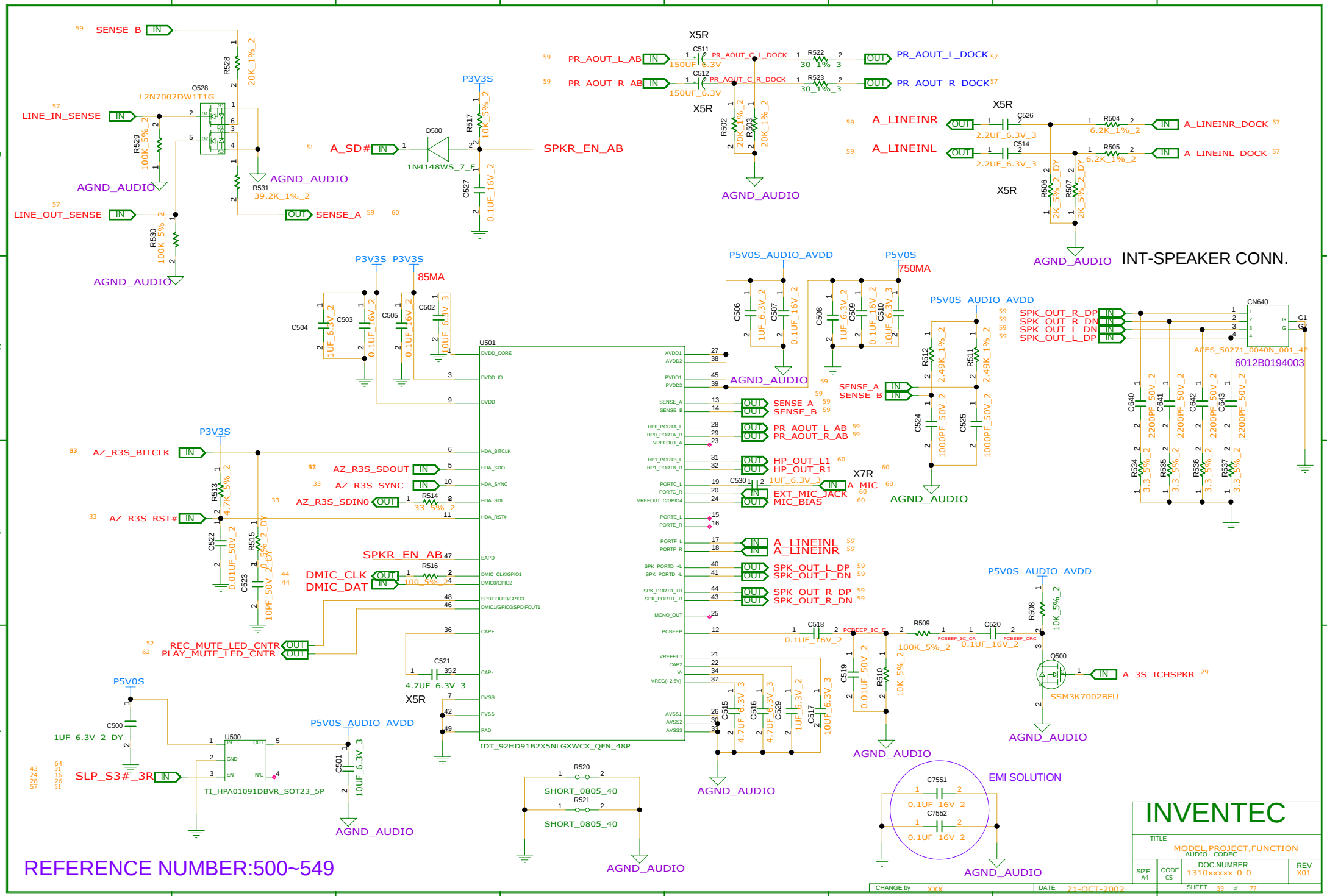
SENSE_B
LINE_IN_SENSE
LINE_OUT_SENSE
Q528
L2N7002DW1T1G
R528 20K_1%_2
R529 100K_5%_2
R530 100K_5%_2
R531 39.2K_1%_2
AGND_AUDIO
SENSE_A
A_SD#
D500
1N4148WS_7_F
R517 10K_5%_2
C527 0.1UF_16V_2
P3V3S
SPKR_EN_AB
PR_AOUT_L_AB
PR_AOUT_R_AB
C511 150UF_6.3V
C512 150UF_6.3V
X5R
R522 30_1%_3
R523 30_1%_3
PR_AOUT_L_DOCK
PR_AOUT_R_DOCK
R502 20K_1%_2
R503 20K_1%_2
A_LINEINR
A_LINEINL
C526 2.2UF_6.3V_3
C514 2.2UF_6.3V_3
R504 6.2K_1%_2
R505 6.2K_1%_2
A_LINEINR_DOCK
A_LINEINL_DOCK
R506 2K_5%_2_DY
R507 2K_5%_2_DY
INT-SPEAKER CONN.
P5V0S_AUDIO_AVDD
P5V0S
750MA
85MA
C504 1UF_6.3V_2
C503 0.1UF_16V_2
C505 0.1UF_16V_2
C502 10UF_6.3V_3
C506 1UF_6.3V_2
C507 0.1UF_16V_2
C508 1UF_6.3V_2
C509 0.1UF_16V_2
C510 10UF_6.3V_3
U501
DVDD_CORE
DVDD_IO
DVDD
AVDD1
AVDD2
PVDD1
PVDD2
SENSE_A
SENSE_B
HP0_PORTA_L
HP0_PORTA_R
VREFOUT_A
HP1_PORTB_L
HP1_PORTB_R
PORTC_L
PORTC_R
VREFOUT_C/GPIO4
PORTE_L
PORTE_R
PORTF_L
PORTF_R
SPK_PORTD_+L
SPK_PORTD_-L
SPK_PORTD_+R
SPK_PORTD_-R
MONO_OUT
PCBEEP
VREFFILT
CAP2
V-
VREG(+2.5V)
AVSS1
AVSS2
AVSS3
HDA_BITCLK
HDA_SDO
HDA_SYNC
HDA_SDI
HDA_RST#
EAPD
DMIC_CLK/GPIO1
DMIC0/GPIO2
SPDIFOUT0/GPIO3
DMIC1/GPIO0/SPDIFOUT1
CAP+
CAP-
DVSS
PVSS
PAD
IDT_92HD91B2X5NLGXWCX_QFN_48P
AZ_R3S_BITCLK
AZ_R3S_SDOUT
AZ_R3S_SYNC
AZ_R3S_SDIN0
AZ_R3S_RST#
R513 4.7K_5%_2
R514 33_5%_2
C522 0.01UF_50V_2
R515 0_5%_2_DY
C523 10PF_50V_2_DY
R516 100_5%_2
DMIC_CLK
DMIC_DAT
REC_MUTE_LED_CNTR
PLAY_MUTE_LED_CNTR
C521 4.7UF_6.3V_3
SPK_OUT_L_DP
SPK_OUT_L_DN
SPK_OUT_R_DP
SPK_OUT_R_DN
SENSE_A
SENSE_B
PR_AOUT_L_AB
PR_AOUT_R_AB
HP_OUT_L1
HP_OUT_R1
C530 1UF_6.3V_3
EXT_MIC_JACK
MIC_BIAS
A_MIC
A_LINEINL
A_LINEINR
R512 2.49K_1%_2
R511 2.49K_1%_2
C524 1000PF_50V_2
C525 1000PF_50V_2
CN640
ACES_50271_0040N_001_4P
6012B0194003
C640 2200PF_50V_2
C641 2200PF_50V_2
C642 2200PF_50V_2
C643 2200PF_50V_2
R534 3.3_5%_2
R535 3.3_5%_2
R536 3.3_5%_2
R537 3.3_5%_2
C518 0.1UF_16V_2
R509 100K_5%_2
C520 0.1UF_16V_2
C519 0.01UF_50V_2
R510 10K_5%_2
R508 10K_5%_2
Q500
SSM3K7002BFU
A_3S_ICHSPKR
C515 4.7UF_6.3V_3
C516 4.7UF_6.3V_3
C529 1UF_6.3V_2
C517 10UF_6.3V_3
C500 1UF_6.3V_2_DY
U500
TI_HPA01091DBVR_SOT23_5P
SLP_S3#_3R
C501 10UF_6.3V_3
R520 SHORT_0805_40
R521 SHORT_0805_40
EMI SOLUTION
C7551 0.1UF_16V_2
C7552 0.1UF_16V_2
REFERENCE NUMBER:500~549
INVENTEC
TITLE
MODEL,PROJECT,FUNCTION
AUDIO CODEC
SIZE A4
CODE CS
DOC.NUMBER 1310xxxxx-0-0
REV X01
SHEET 59 of 77
CHANGE by XXX
DATE 21-OCT-2002

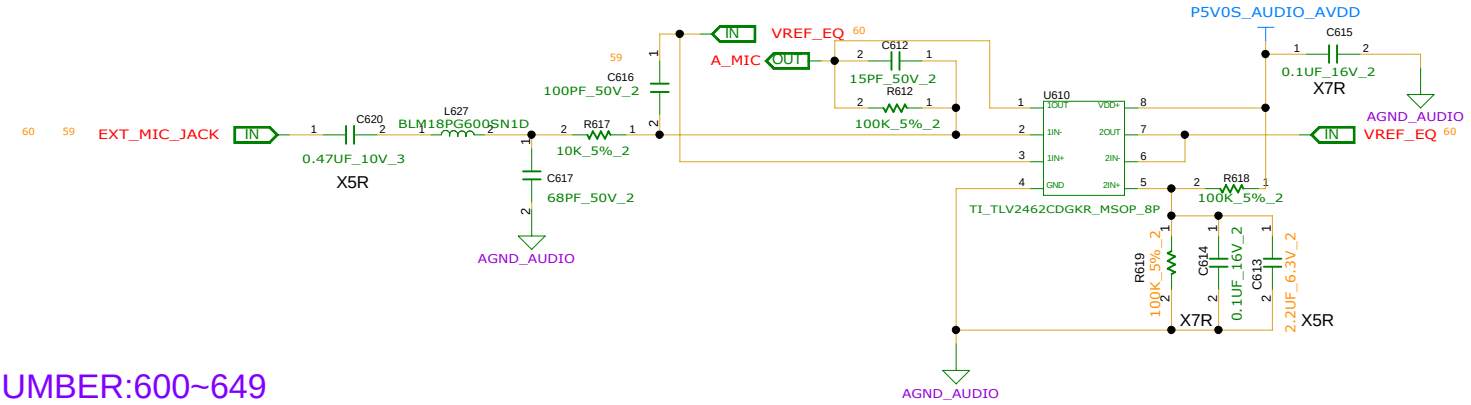

REFERENCE NUMBER:600~649

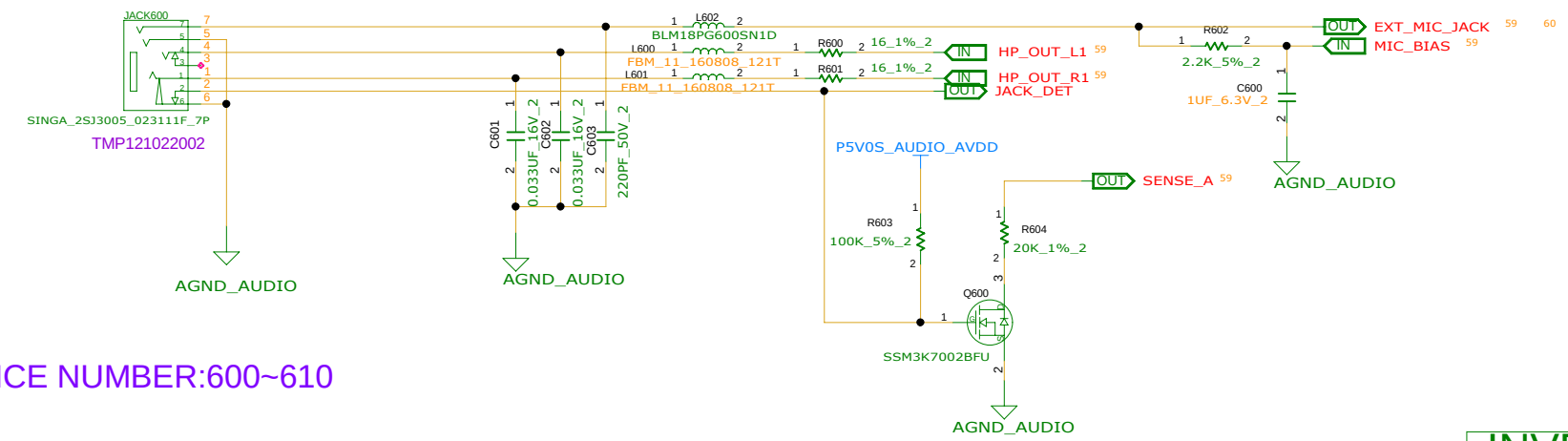

REFERENCE NUMBER:600~610

INVENTEC

TITLE
MODEL,PROJECT,FUNCTION
EXT. MIC AMP. & AUDIO JACK

SIZE	CODE	DOC.NUMBER	REV
A3	CS	1310xxxxx-0-0	X01

CHANGE by XXX DATE 21-OCT-2002 SHEET 60 of 77

www.indiafix.in

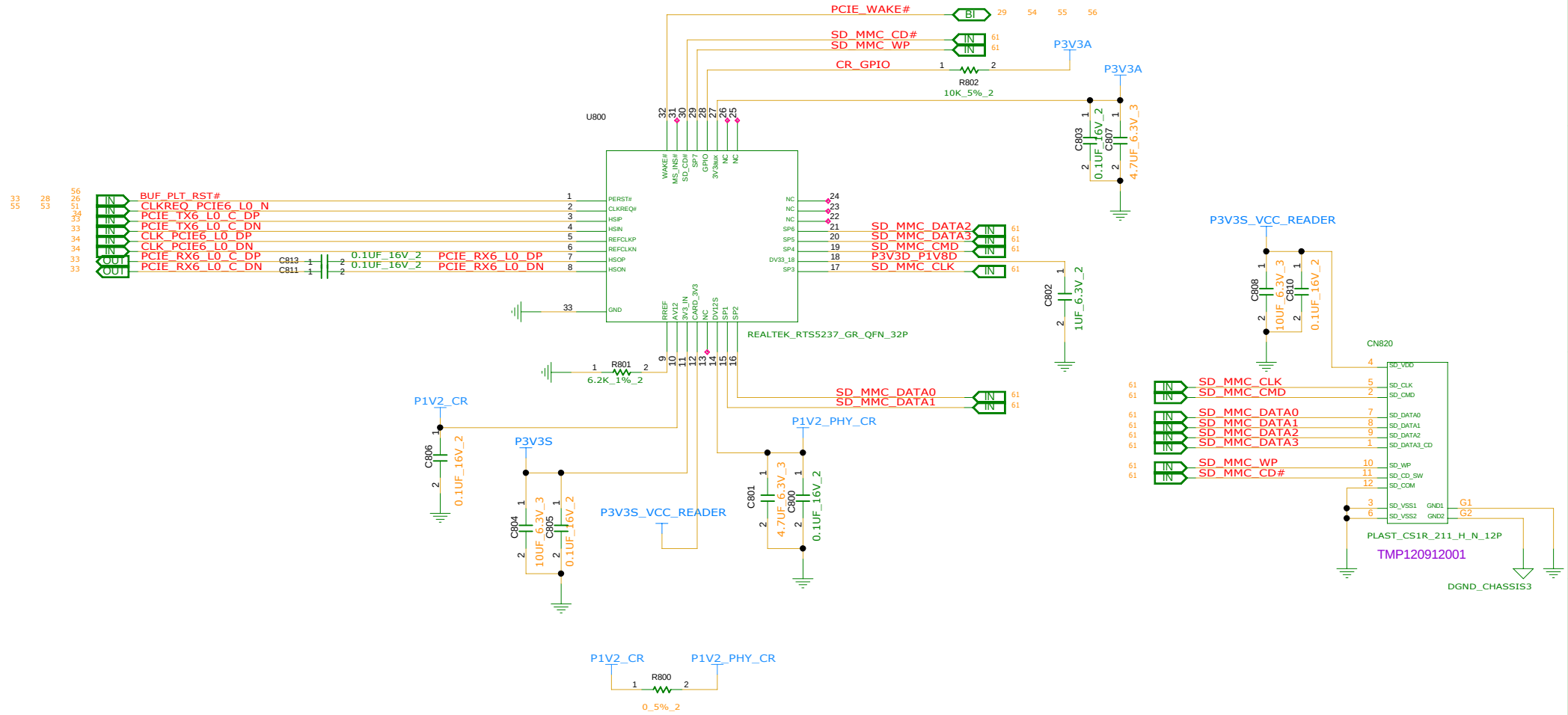

REFERENCE NUMBER:800~899

INVENTEC

TITLE: MODEL_PROJECT,FUNCTION
CARD READER

SIZE	CODE	DOC.NUMBER	REV
A3	CS	1310xxxxx-0-0	X01

SHEET 61 of 77

CHANGE by XXX DATE 21-OCT-2002

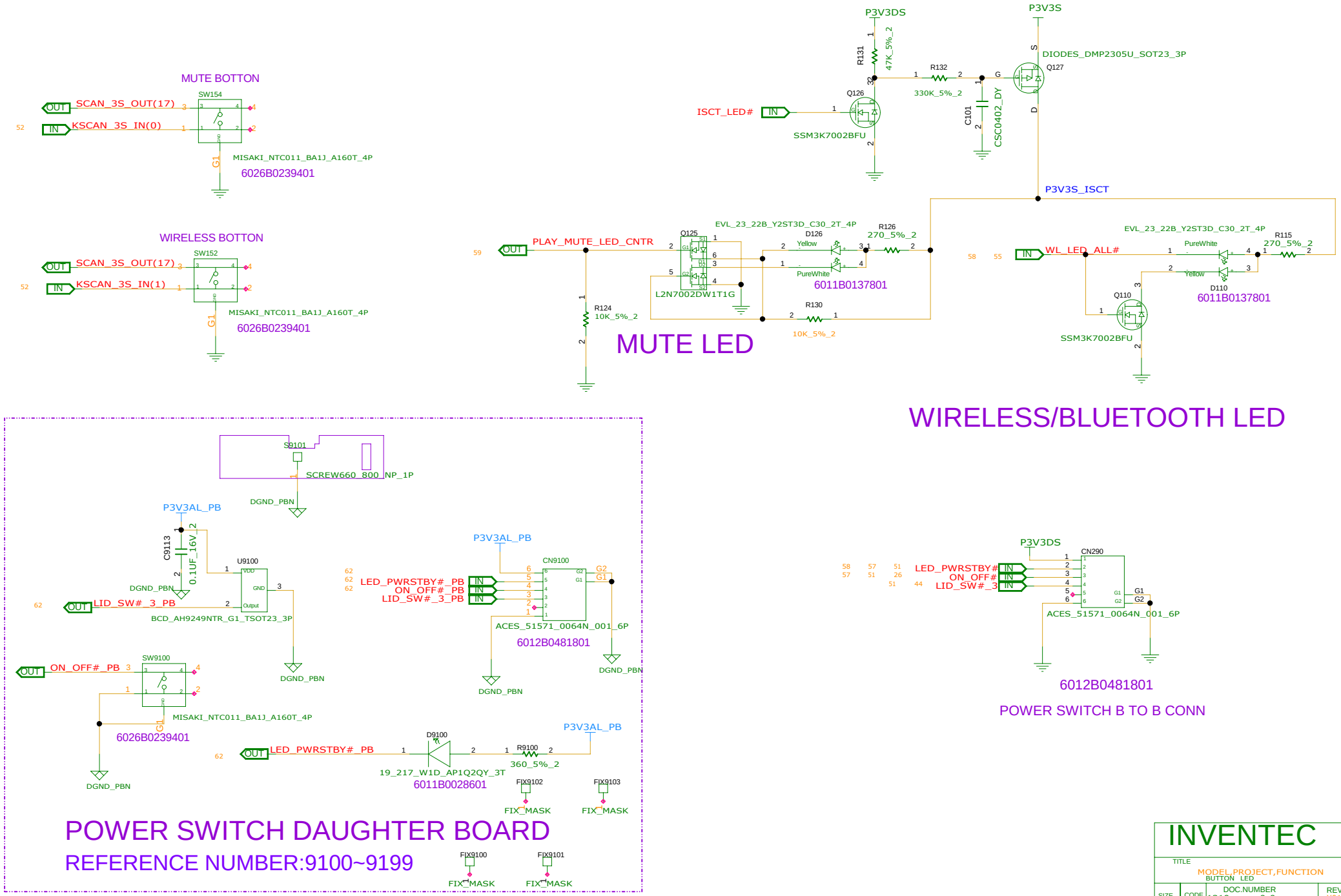

www.indiafix.in

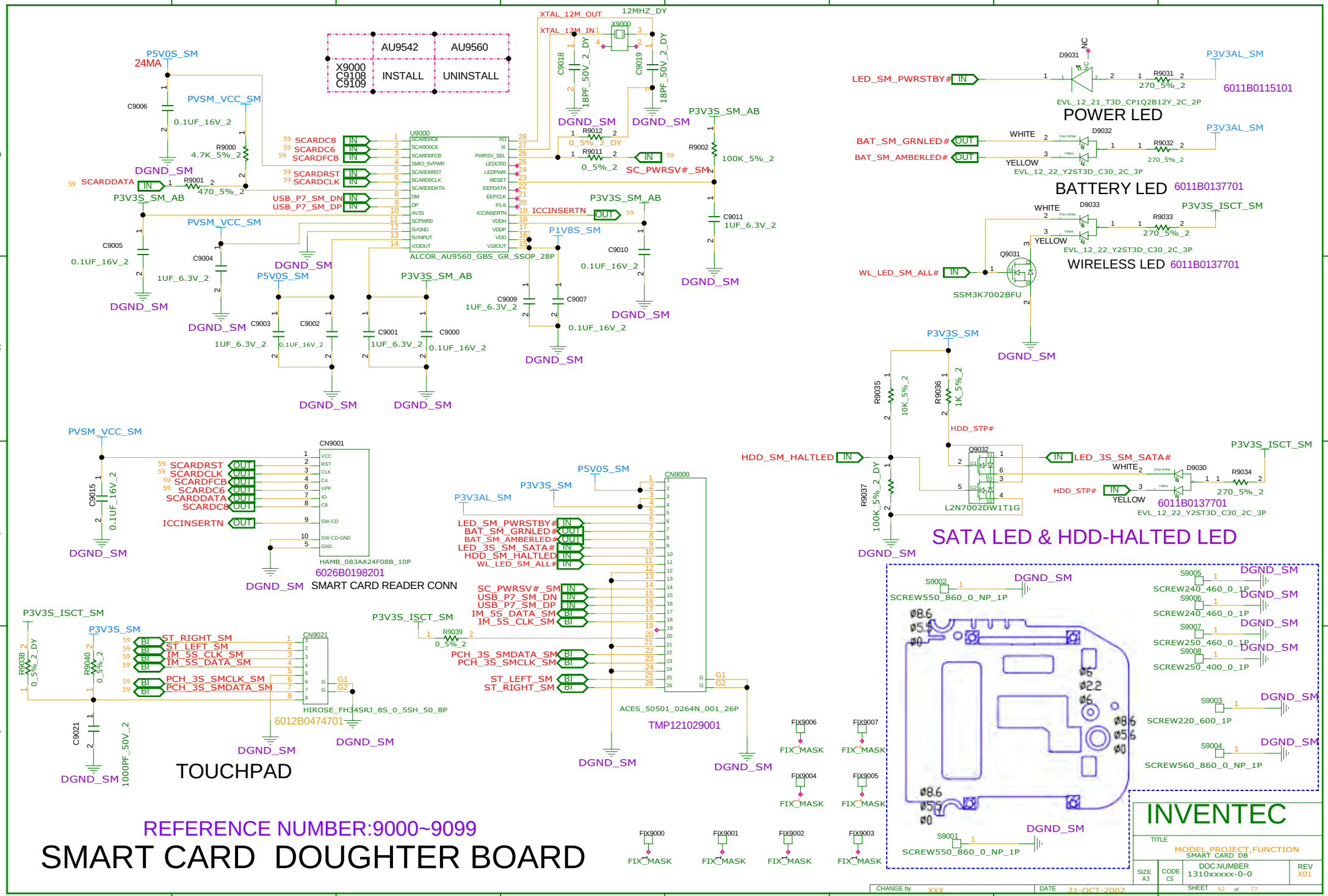
AU9542
AU9560
X9000
C9108
C9109
INSTALL
UNINSTALL
U9000
ALCOR_AU9560_GBS_GR_SSOP_28P
CN9001
HAMB_083AA24F08B_10P
6026B0198201
SMART CARD READER CONN
CN9000
ACES_50501_0264N_001_26P
TMP121029001
CN9021
HIROSE_FH34SRJ_8S_0_5SH_50_8P
6012B0474701
TOUCHPAD
POWER LED
6011B0115101
BATTERY LED
6011B0137701
WIRELESS LED
6011B0137701
SATA LED & HDD-HALTED LED
6011B0137701
L2N7002DW1T1G
SSM3K7002BFU
REFERENCE NUMBER:9000~9099
SMART CARD DOUGHTER BOARD
INVENTEC
MODEL,PROJECT,FUNCTION
SMART CARD DB
DOC.NUMBER
1310xxxxx-0-0
REV
X01
SIZE
A3
CODE
CS
SHEET 63 of 77
CHANGE by XXX
DATE 21-OCT-2002

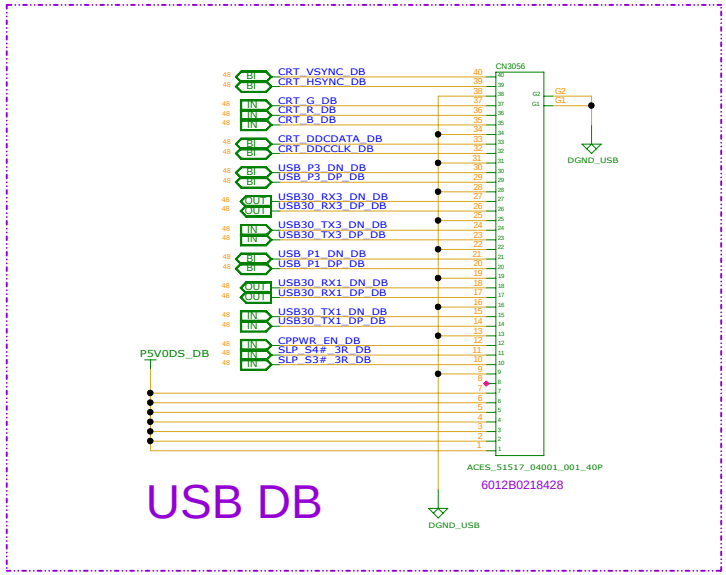

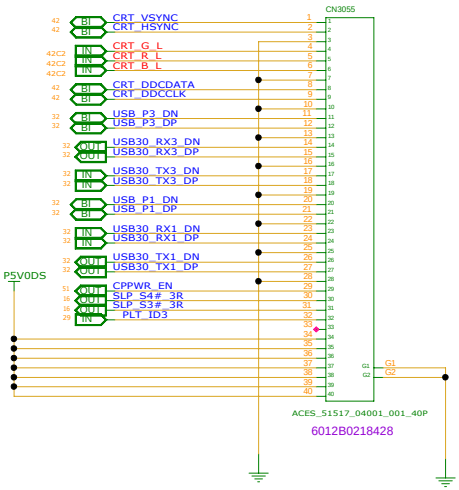

INVENTEC

TITLE MODEL,PROJECT,FUNCTION
RESERVE

SIZE	CODE	DOC.NUMBER	REV
C	CS	1310xxxxx-0-0	X01

CHANGE by XXX DATE 21-OCT-2002 SHEET 64 of 72

www.indiafix.in

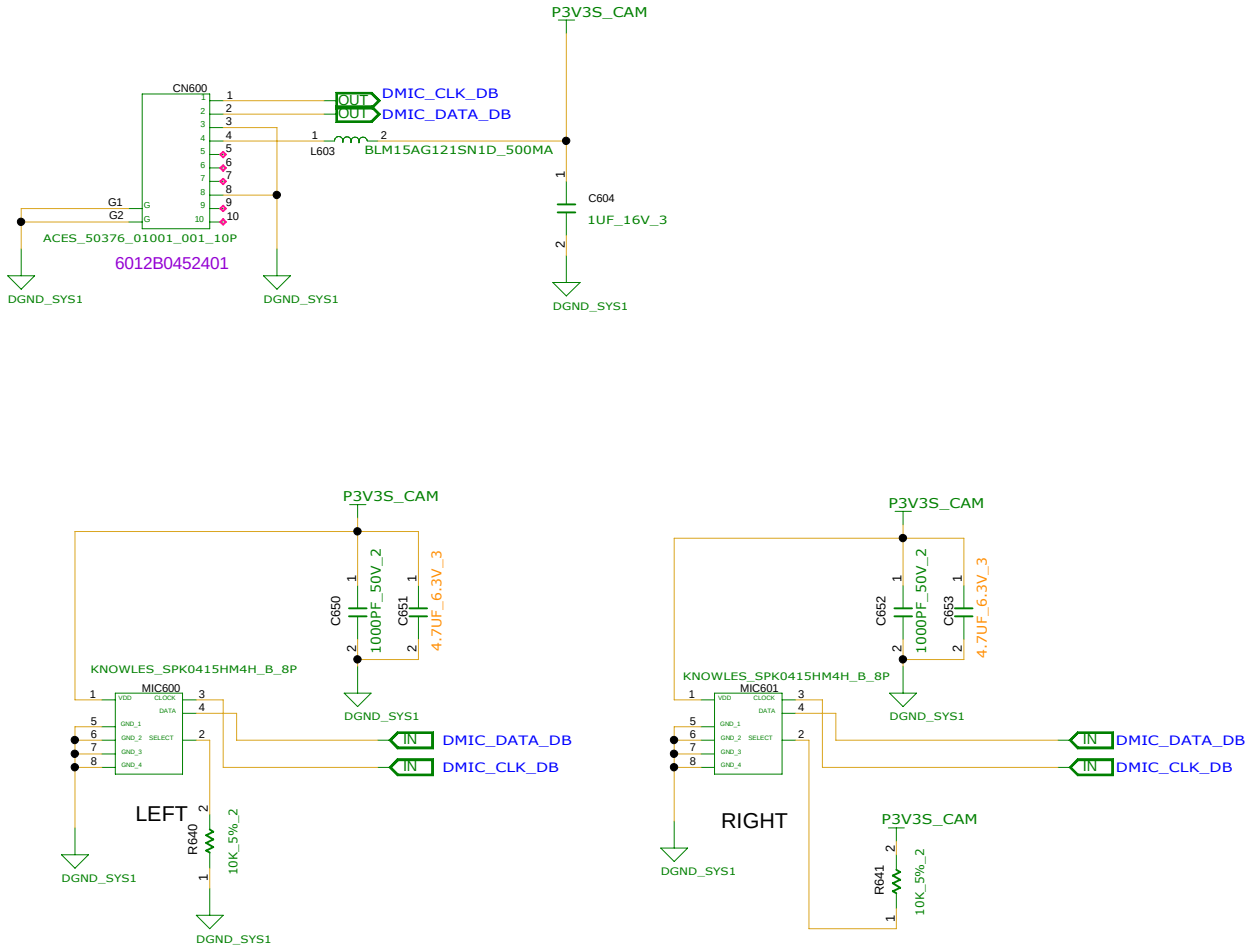

FIX600
FIX_MASK

FIX601
FIX_MASK

REFERENCE NUMBER:600~649

MIC DOUGHTER BOARD

INVENTEC

TITLE
MODEL,PROJECT,FUNCTION
Block Diagram

SIZE	CODE	DOC.NUMBER	REV
A3	CS	1310xxxxx-0-0	X01

CHANGE by XXX DATE 21-OCT-2002 SHEET 65 of 77

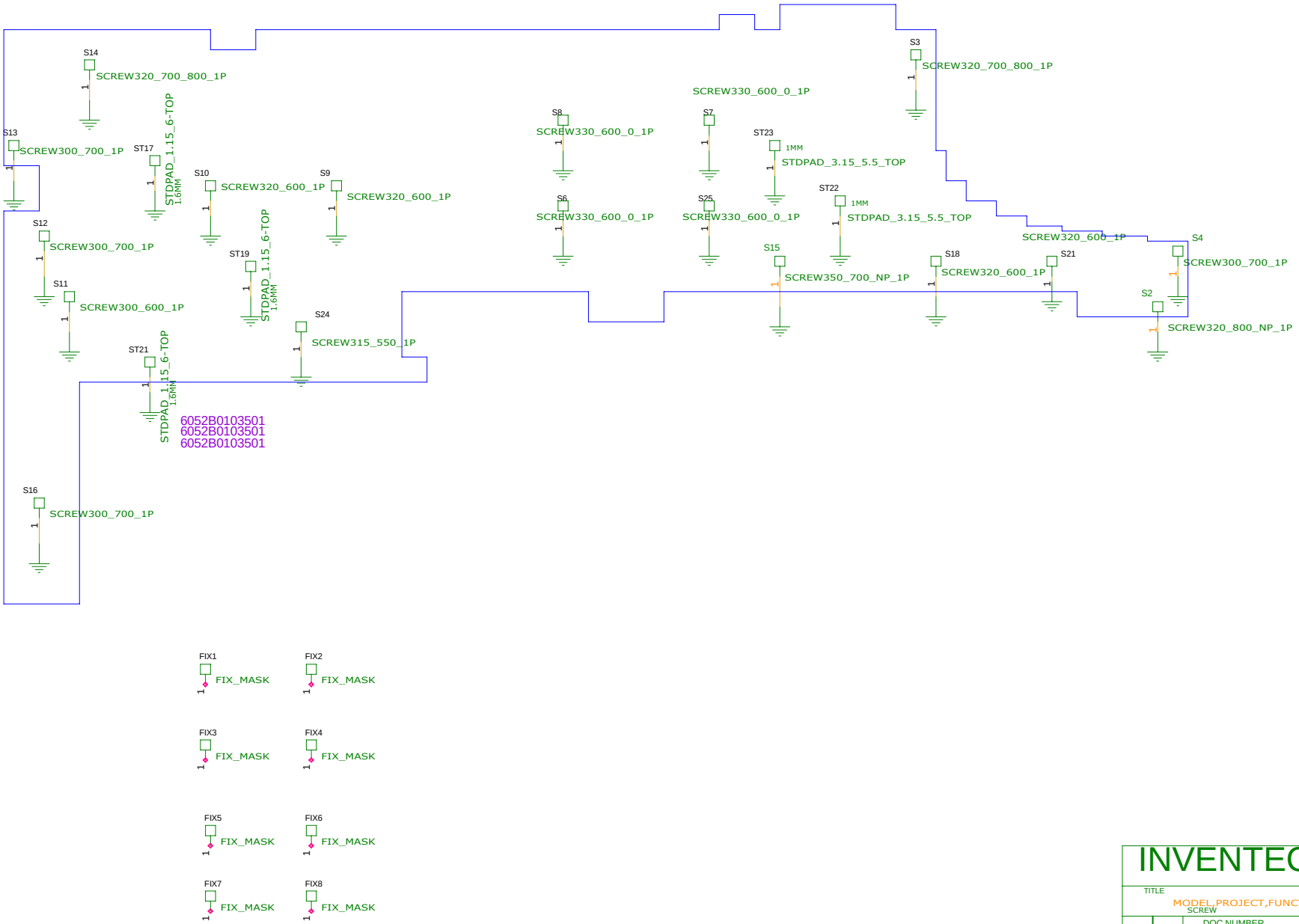

INVENTEC

TITLE
MODEL,PROJECT,FUNCTION
SCREW

SIZE	CODE	DOC.NUMBER	REV
A3	CS	1310xxxxx-0-0	X01

CHANGE by XXX DATE 21-OCT-2002 SHEET 66 of 77

www.indiafix.in

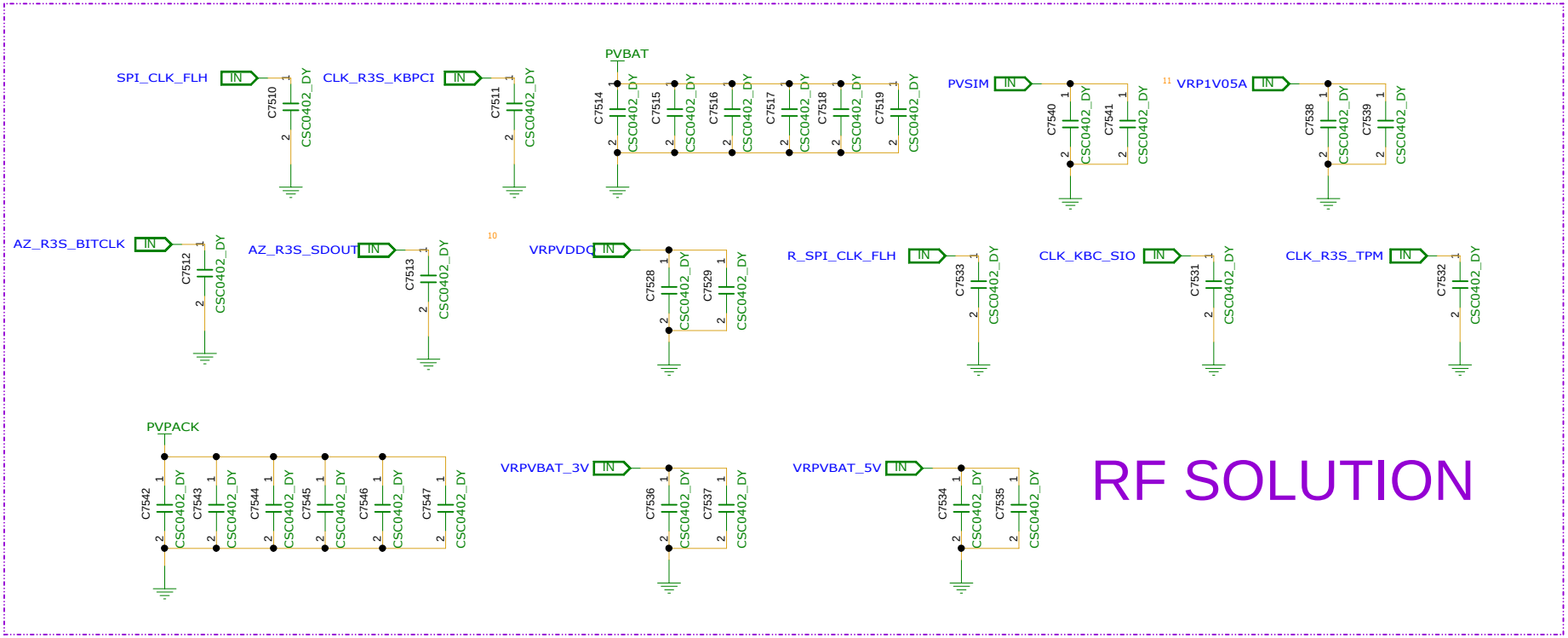

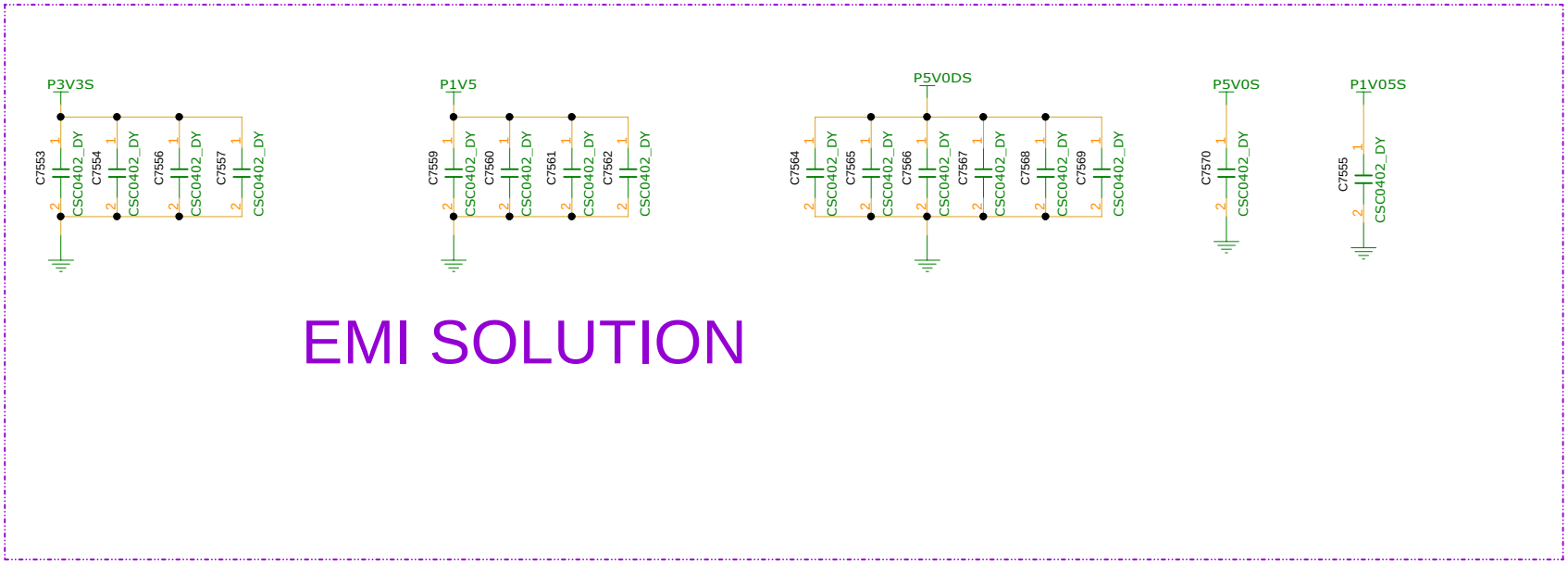

INVENTEC

TITLE
MODEL.PROJECT.FUNCTION
EMI & RF SOLUTION

SIZE	CODE	DOC.NUMBER	REV
A3	CS	1310xxxxx-0-0	X01

CHANGE by XXX DATE 21-OCT-2002 SHEET 67 of 77

MLPS TABLE

Size of the Primary Memory Apertures	ROM_CONFIG[2:0]
128 MB	000
256 MB	001
64 MB	010
Reserved	011

R_pu (Ω)	R_pd (Ω)	Bits [3:1]
NC	4750	000
8450	2000	001
4530	2000	010
6980	4990	011
4530	4990	100
3240	5620	101
3400	10000	110
4750	NC	111

Note: 0402 1% resistors are required.

Capacitor Value (nF)	Bits [5:4]
680	00
82	01
10	10
NC	11

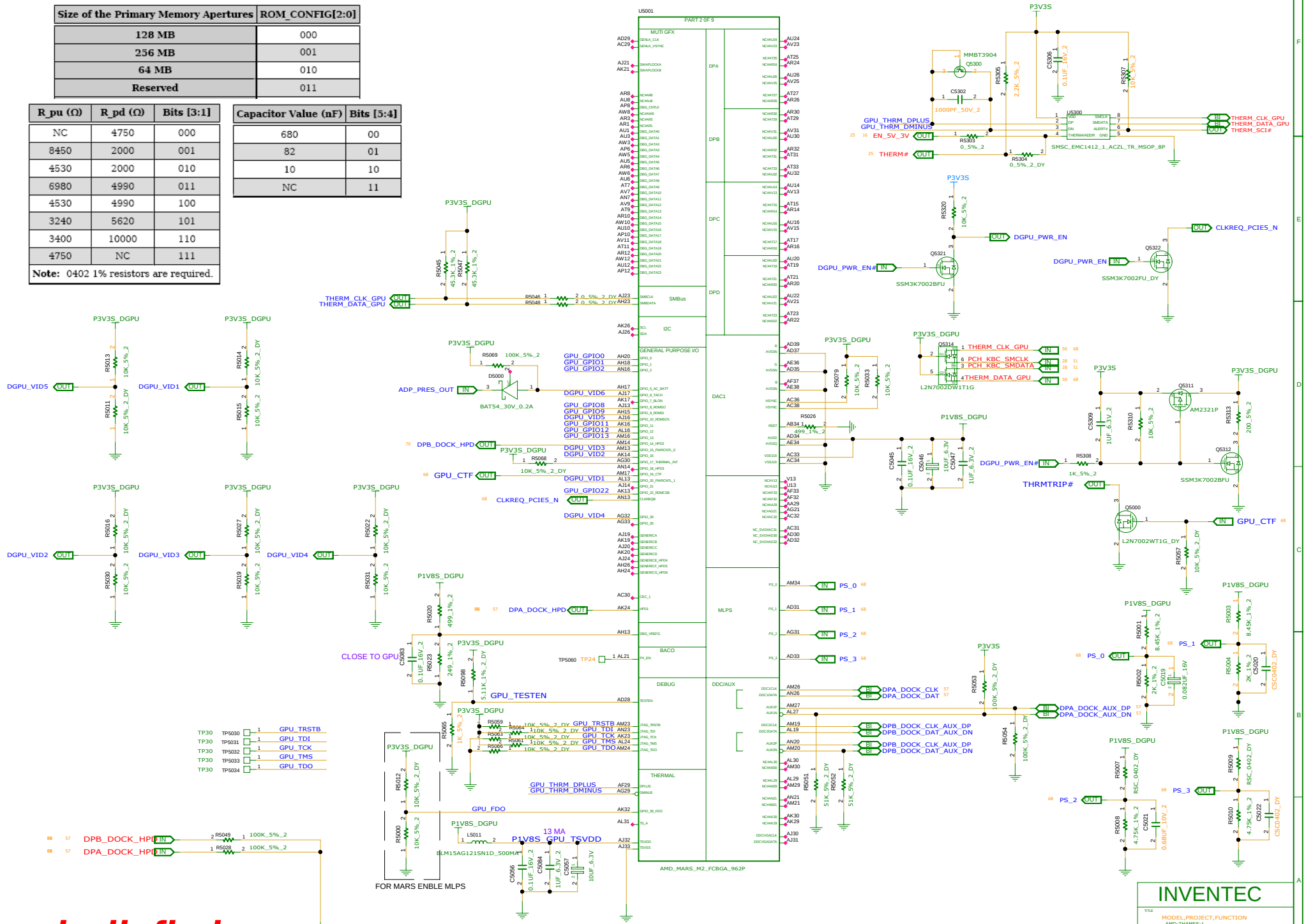

www.indiafix.in

LPT-LP GPIO 34	MARS MLPS Bit: PS_3 [3:1]			R_pu (Ω)	R_pd (Ω)	Vendor & PN	Die Ver.	
0	0	0	0	NC	4750	Samsung - K4G20325FD-FC04	D	**GDDR5 - 64Mx32**/128Mx16, 1.5V/**1.35V**, 5.0Gbps/**4Gbps**
	0	0	1	8450	2000	Hynix - H5GQ2H24AFR-T2C	A (Gemma)	**GDDR5 - 64Mx32**/128Mx16, 1.5V/**1.35V**, 5.0Gbps/**4Gbps**
1	1	1	0	3400	10000	*Samsung - K4G41325FC-HC04	C	***GDDR5 - 128Mx32**/256Mx16, 1.5V/**1.35V**, 5.0Gbps/**4Gbps**
	1	1	1	4759	NC	*Hynix - H5GC4H24MFR-T0C	Huma	***GDDR5 - 128Mx32**/256Mx16, 1.5V/**1.35V**, 5.0Gbps/**4Gbps**
VBIOS selection : 0 : VBIOS 1, 64Mx32 for 1GB sku 1 : VBIOS 2, 128Mx32 for 2GB sku	Vram configuration 00: 64Mx32 (2Gb) 11: 128Mx32 (4Gb)		Vendor ID 0: Samsung 1: Hynix	Resistor Divider Lookup Table		Vram information * 2GB sku, TBD		

MLPS Implementation

- Connect GPIO_28 to 10K pulldown to enable MLPS
- If any of PS_0/1/2/3 is not used, leave "no connect"
- R_pu, R_pd and C must be properly populated per tables below
- Place MLPS circuit components as close to the ASIC as possible
- Total DC resistance of trace between PS pin and C should be less than 2 ohms
- Total DC resistance of trace between C and ground should be less than 2 ohms
- Trace capacitance should be less than 100pF. Resistors should be of +/-1% tolerance

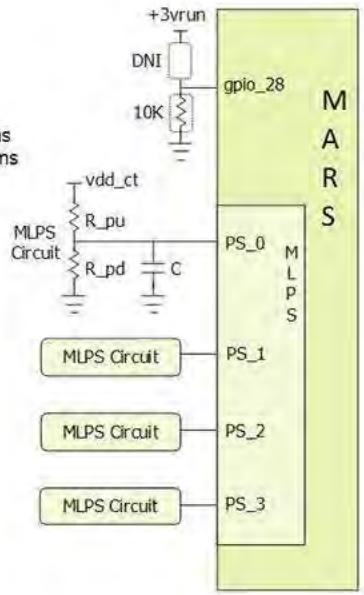

Capacitor Lookup Table

C (nF)	Bits(5,4)
680	00
82	01
10	10
NC	11

Resistor Divider Lookup Table

R_pu (Ohm)	R_pd (Ohm)	Bits(3,2,1)
NC	4750	000
8450	2000	001
4530	2000	010
6980	4990	011
4530	4990	100
3240	5620	101
3400	10000	110
4750	NC	111

Pin/Bit	Name	Description	Default	Legacy
PS_0[3:1]	romidcfg[2:0]	Memory aperture size or ROM type select: If bios_rom_en = 0, romidcfg[2:0] define memory aperture size If bios_rom_en = 1, romidcfg[2:0] define ROM type	xxx	gpio_13 gpio_12 gpio_11
PS_0[4]	n/a	Reserved	1	genlk_vsync
PS_1[1]	bif_gen3_en_a	PCIe Gen3 capability: 1=Gen3 supported, 0=Gen3 not supported	x	gpio_2
PS_1[2]	bif_clk_pm_en	PCIe Clk PM capability: 1 = CLKREQB supported	x	gpio_8
PS_1[3]	n/a	Reserved		genlk_clk
PS_1[4]	tx_pwrs_enb	PCIe Tx power savings: 0=50% swing, 1=full swing	x	gpio_0
PS_1[5]	tx_deemph_en	PCIe Tx de-emphasis: 1=Tx de-emphasis enabled	x	gpio_1
PS_2[1]	n/a	Reserved		n/a
PS_2[2]	n/a	Reserved		n/a
PS_2[3]	bios_rom_en	Enable external BIOS ROM: 1=External ROM connected	x	gpio_22
PS_2[4]	vga_dis	VGA disable: 1=Disable this GPU as the system's VGA controller	0	gpio_9
PS_2[5]	n/a	Reserved		n/a
PS_3[1]	MEM Vendor ID	MEM Vendor ID	0	n/a
PS_3[2]	MEM Vendor ID	MEM Vendor ID	0	n/a
PS_3[3]	MEM Vendor ID	MEM Vendor ID	0	n/a
PS_3[5] PS_3[4] PS_0[5]	aud_port_cp[2] aud_port_cp[1] aud_port_cp[0]	3-bit field indicating number of audio-capable display outputs	xxx	n/a

MLPS Bit	Strap Name	Description
PS_0[1]	ROM_CONFIG[0]	See Primary Memory Aperture Sizes.
PS_0[2]	ROM_CONFIG[1]	
PS_0[3]	ROM_CONFIG[2]	
PS_0[4]	N/A	Reserved for internal use only. **Must be 1 at reset.**
PS_0[5]	AUD_PORT_CONN_PINSTRAP[0]	The LSB (least significant bit) of thestrap option that indicates thenumber of audio-capable displayoutputs.
PS_1[1]	STRAP_BIF_GEN3_EN_A	PCIe GEN3 capability. **1 = PCIe GEN3 is supported.**
PS_1[2]	STRAP_BIF_CLK_PM_EN	Determines whether or not thePCIe reference clock powermanagement capability is reportedin the PCI configuration space(otherwise known as CLKREQB). **0 = The CLKREQB powermanagement capability is disabled**
PS_1[3]	N/A	Reserved for internal use only. **Must be 0 at reset.**
PS_1[4]	STRAP_TX_CFG_DRV_FULL_SWING	Control the transmitter full-/half-swing mode **1 = The transmitter full-swing isenabled**
PS_1[5]	STRAP_TX_DEEMPH_EN	PCI EXPRESS® transmitter, de-emphasis enable. **1 = Tx deemphasis enabled.**
PS_2[1]	N/A	Reserved.
PS_2[2]	N/A	Reserved.
PS_2[3]	STRAP_BIOS_ROM_EN	To enable the external BIOS ROMdevice. **0 = Disable the external BIOS ROMdevice.**
PS_2[4]	STRAP_BIF_VGA_DIS	VGA disable determines whether ornot the card will be recognized asthe system's VGA controller(through the SUBCLASS field in thePCI configuration space). **0 = VGA controller capacityenabled.**
PS_2[5]	N/A	Reserved

PS_2[1]	N/A	Reserved.
PS_2[2]	N/A	Reserved.
PS_2[3]	STRAP_BIOS_ROM_EN	To enable the external BIOS ROMdevice. **0 = Disable the external BIOS ROMdevice.**
PS_2[4]	STRAP_BIF_VGA_DIS	VGA disable determines whether ornot the card will be recognized asthe system's VGA controller(through the SUBCLASS field in thePCI configuration space). **0 = VGA controller capacityenabled.**
PS_2[5]	N/A	Reserved

PS_3[1]	BOARD_CONFIG[0]	See **Board** configuration relatedstrapping, such as for **memory ID.**
PS_3[2]	BOARD_CONFIG[1]	
PS_3[3]	BOARD_CONFIG[2]	
PS_3[4]	AUD_PORT_CONN_PINSTRAP[1]	Determines the maximum numberof digital display audio endpointsthat will be presented to the OS anduser. 111 = No usable endpoints. 110 = One usable endpoint. **101 = Two usable endpoints.** 100 = Three usable endpoints. 011 = Four usable endpoints. 010 = Five usable endpoints. 001 = Six usable endpoints. 000 = All endpoints are usable.
PS_3[5]	AUD_PORT_CONN_PINSTRAP[2]	

Note : AUD[1] (on HYSNC) and AUD[0] (on VSYNC) still need to be properly pin strapped evenin a MLPS-based design.

INVENTEC

TITLE MODEL,PROJECT,FUNCTION
Block Diagram

SIZE	CODE	DOC.NUMBER	REV
C	CS	1310xxxxx-0-0	X01

CHANGE by XXX DATE 21-OCT-2002 SHEET 69 of 72

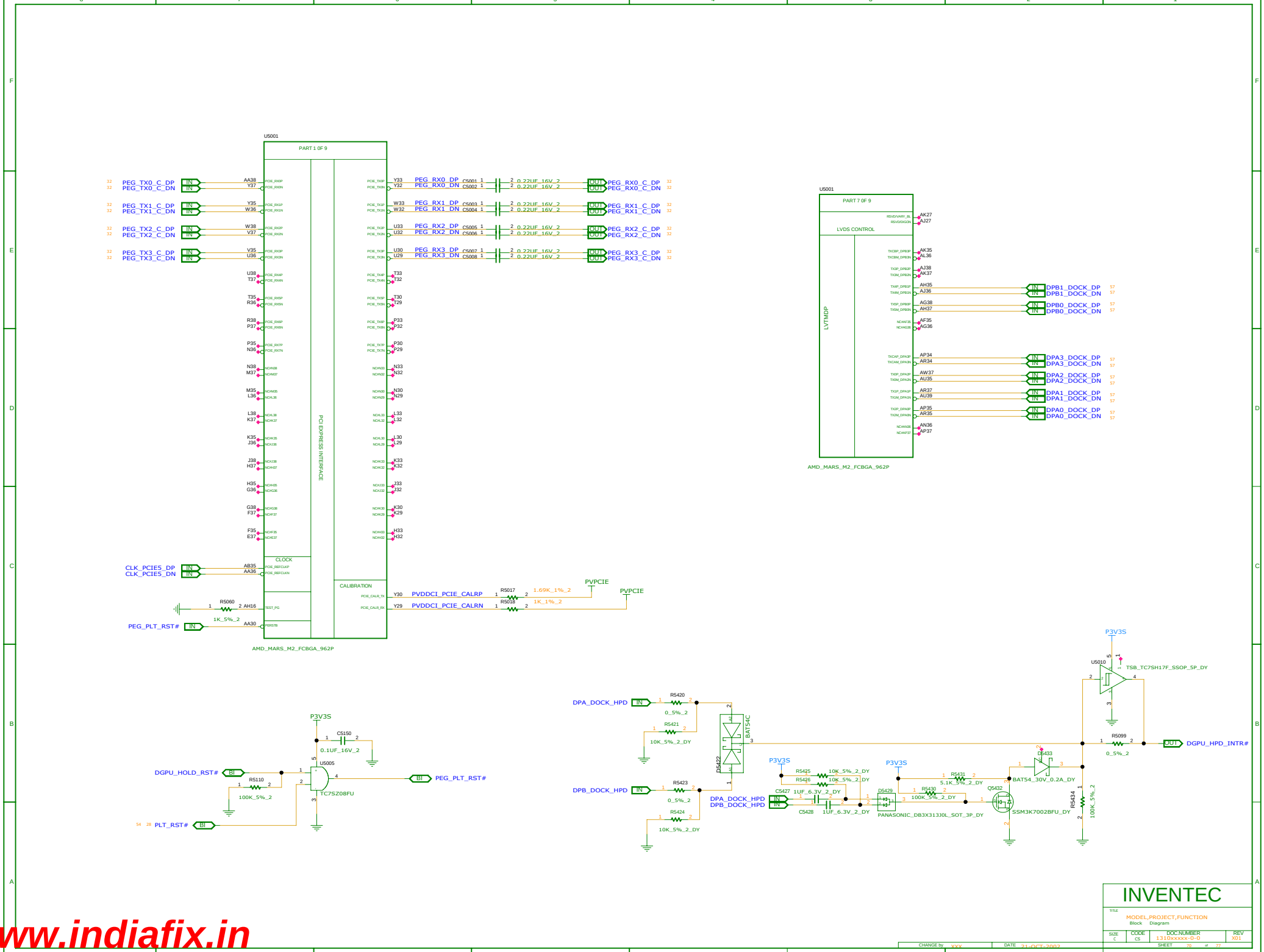

www.indiafix.in

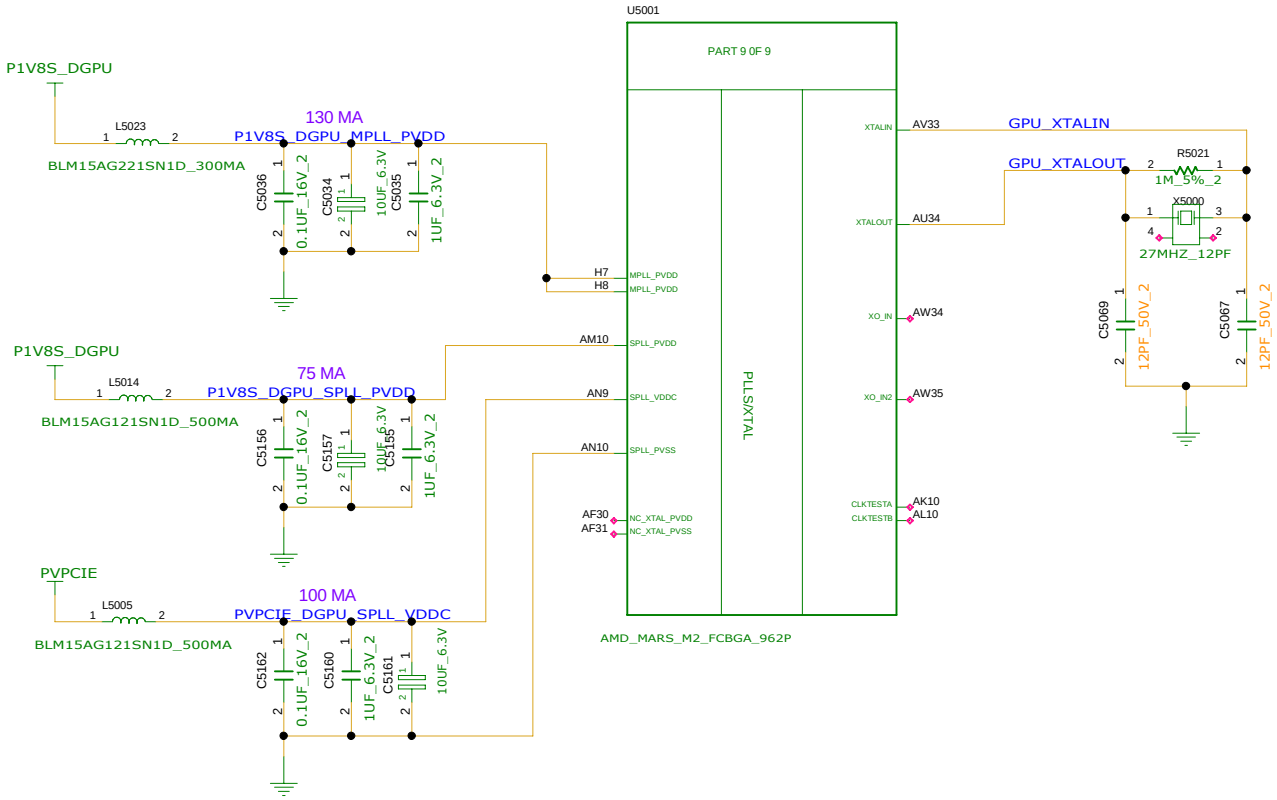

INVENTEC

TITLE
MODEL,PROJECT,FUNCTION
Block Diagram

SIZE	CODE	DOC.NUMBER	REV
A3	CS	1310xxxxx-0-0	X01

CHANGE by XXX DATE 21-OCT-2002 SHEET 71 of 77

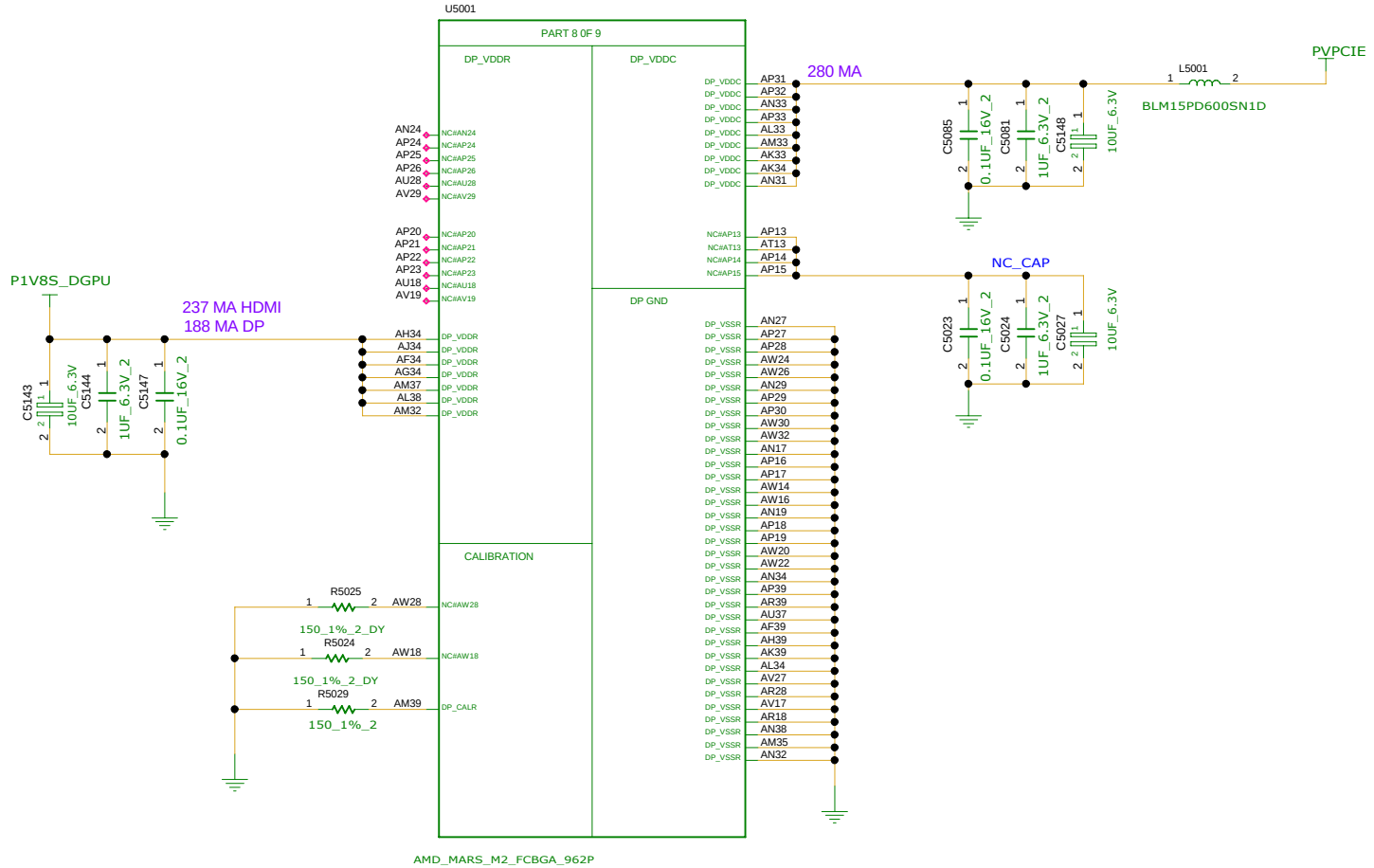

INVENTEC

TITLE
MODEL,PROJECT,FUNCTION
Block Diagram

SIZE	CODE	DOC.NUMBER	REV
A3	CS	1310xxxxx-0-0	X01

CHANGE by XXX DATE 21-OCT-2002 SHEET 72 of 77

www.indiafix.in

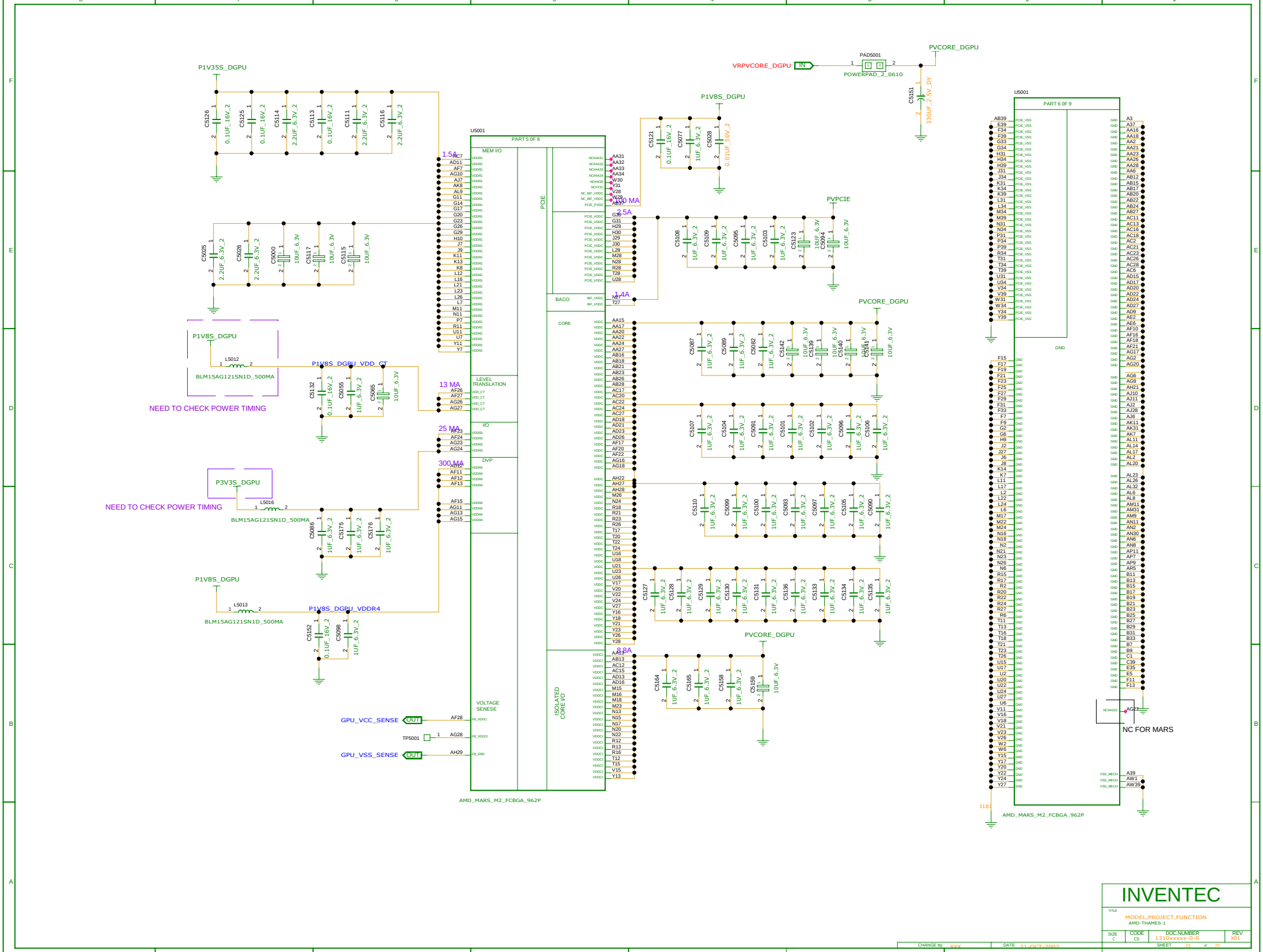

INVENTEC

TITLE
MODEL,PROJECT,FUNCTION
AMD-THAMES-1

SIZE	CODE	DOC.NUMBER	REV
C	CS	1310xxxxx-0-0	X01

SHEET 73 of 77

CHANGE by XXX DATE 21-OCT-2002

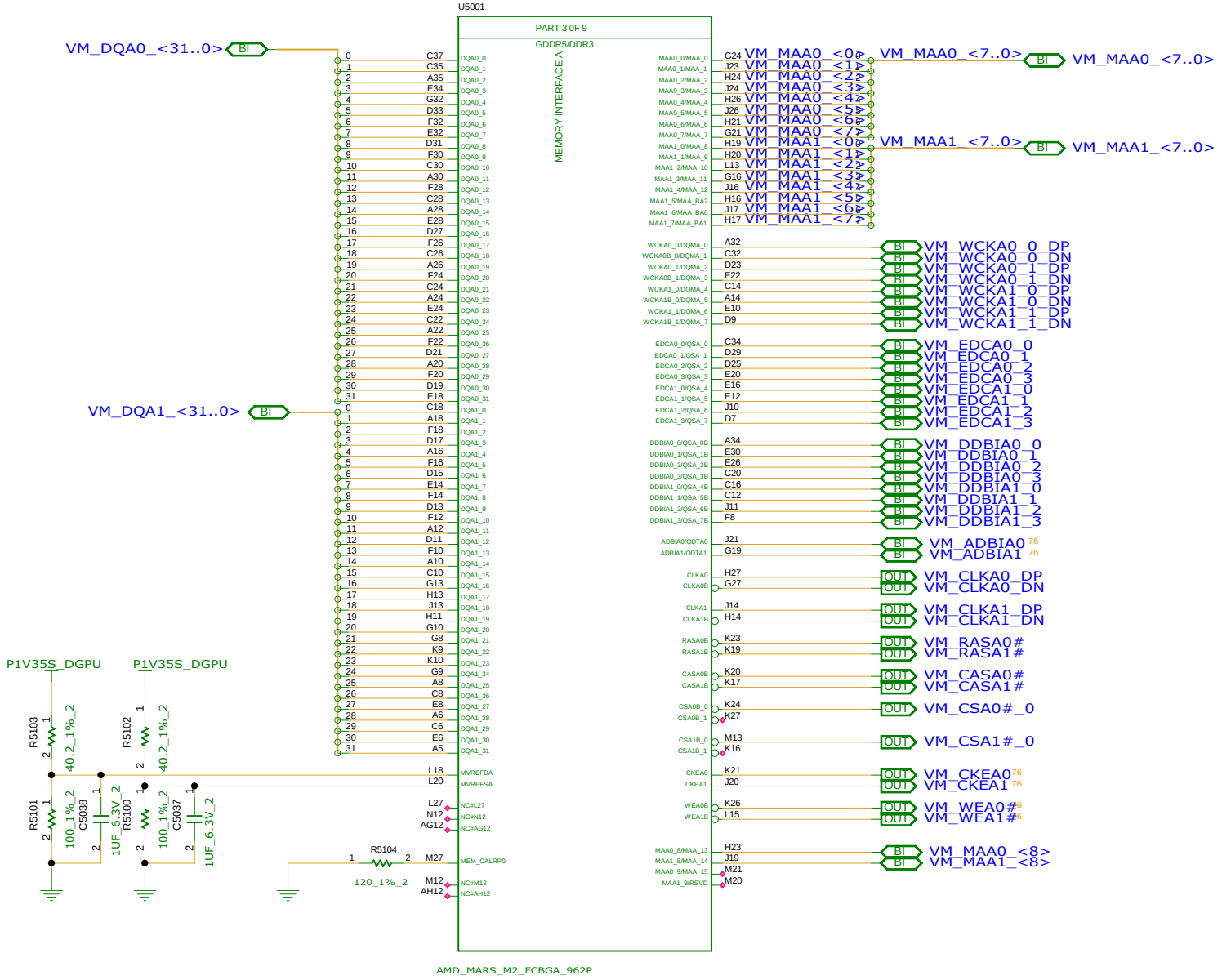

INVENTEC

TITLE
MODEL,PROJECT,FUNCTION
AMD-THAMES-4

SIZE	CODE	DOC.NUMBER	REV
A3	CS	1310xxxxx-0-0	X01

CHANGE by XXX DATE 21-OCT-2002 SHEET 74 of 77

www.indiafix.in

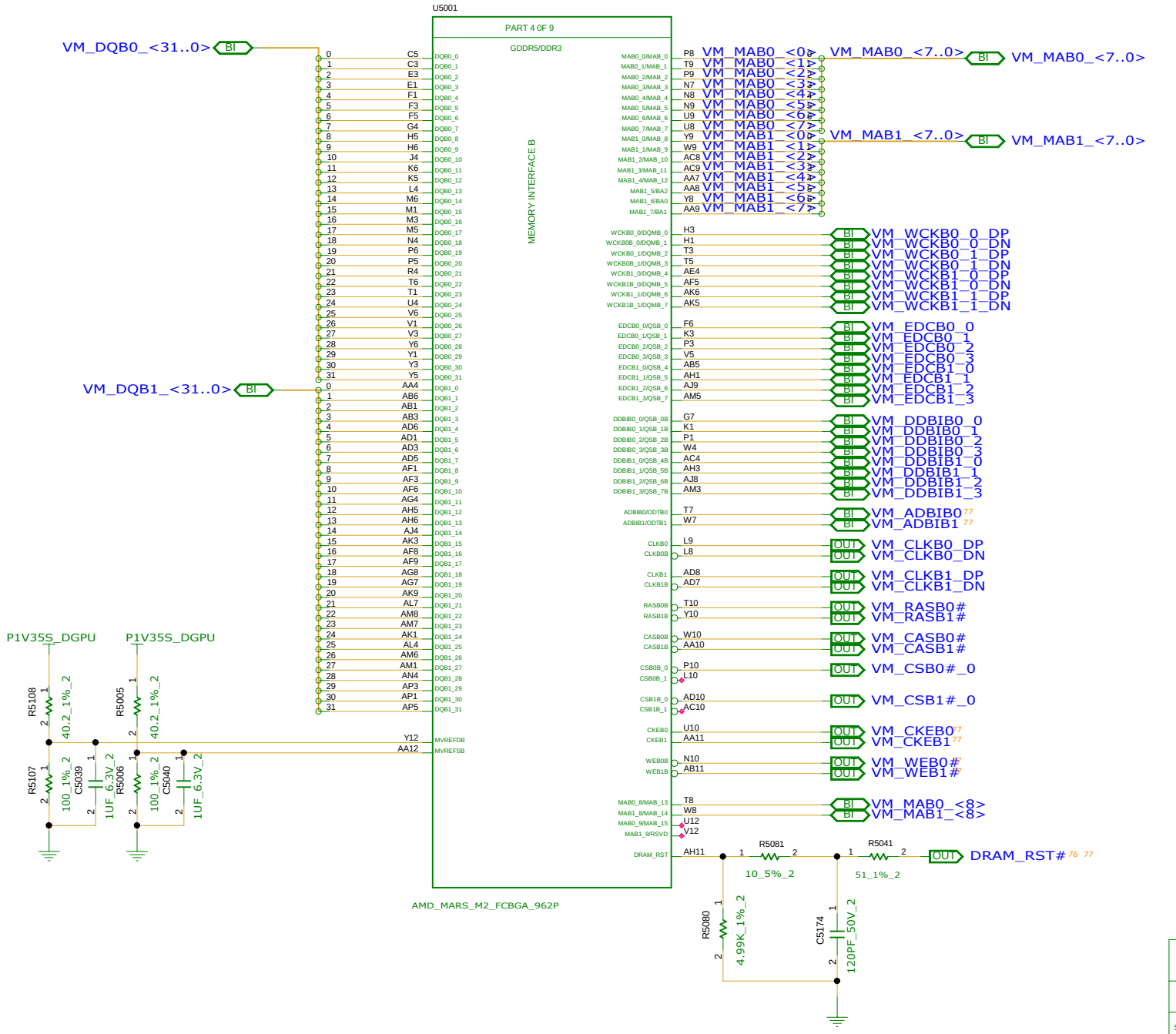

INVENTEC

TITLE
MODEL,PROJECT,FUNCTION
AMD-THAMES-3

SIZE	CODE	DOC.NUMBER	REV
A3	CS	1310xxxxx-0-0	X01

CHANGE by XXX DATE 21-OCT-2002 SHEET 75 of 77

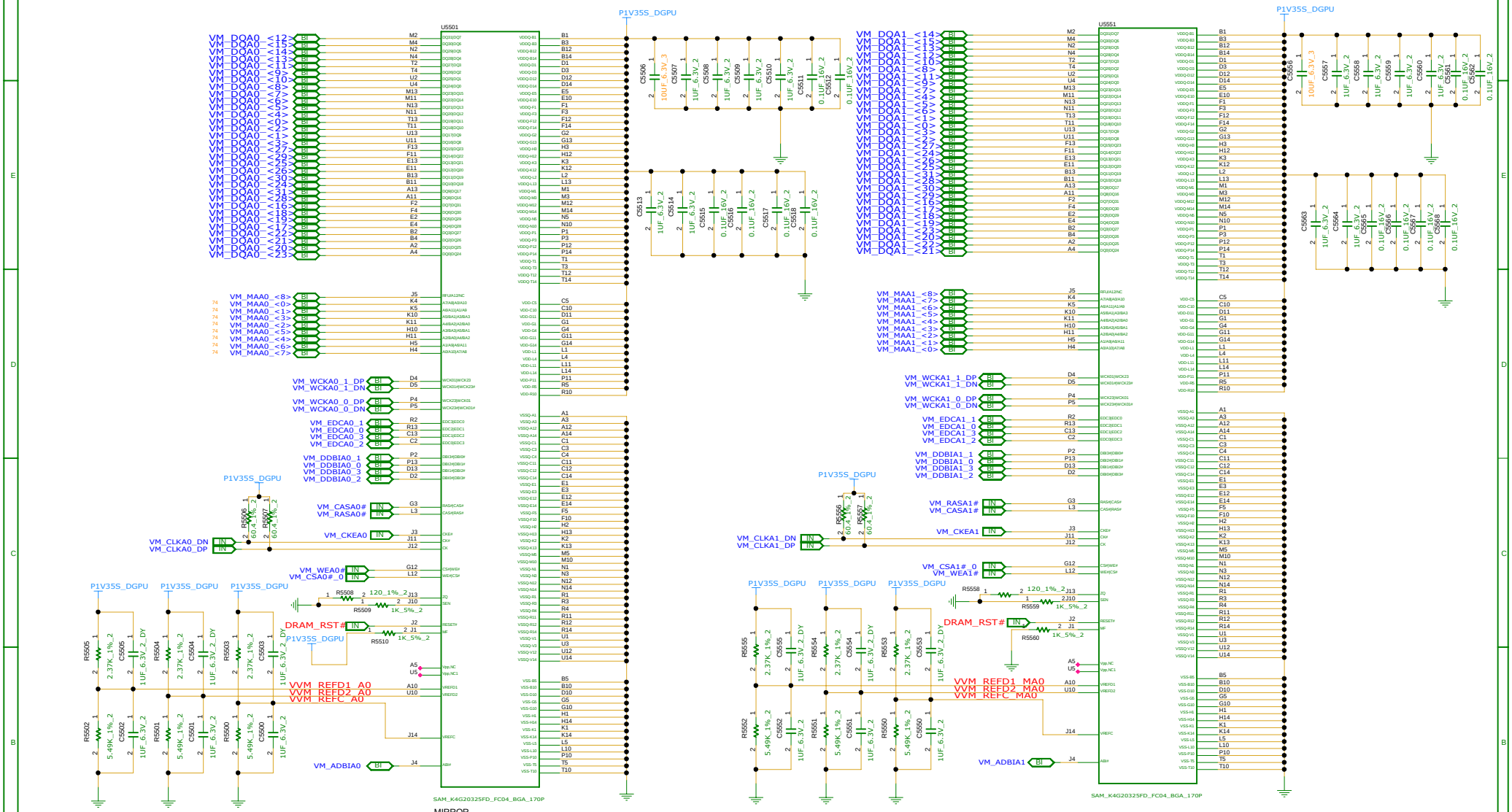

INVENTEC

TITLE: MODEL,PROJECT,FUNCTION
VRAM-1

SIZE	CODE	DOC.NUMBER	REV
C	CS	1310xxxxx-0-0	X01

CHANGE by XXX DATE 21-OCT-2002 SHEET 76 of 77

www.indiafix.in

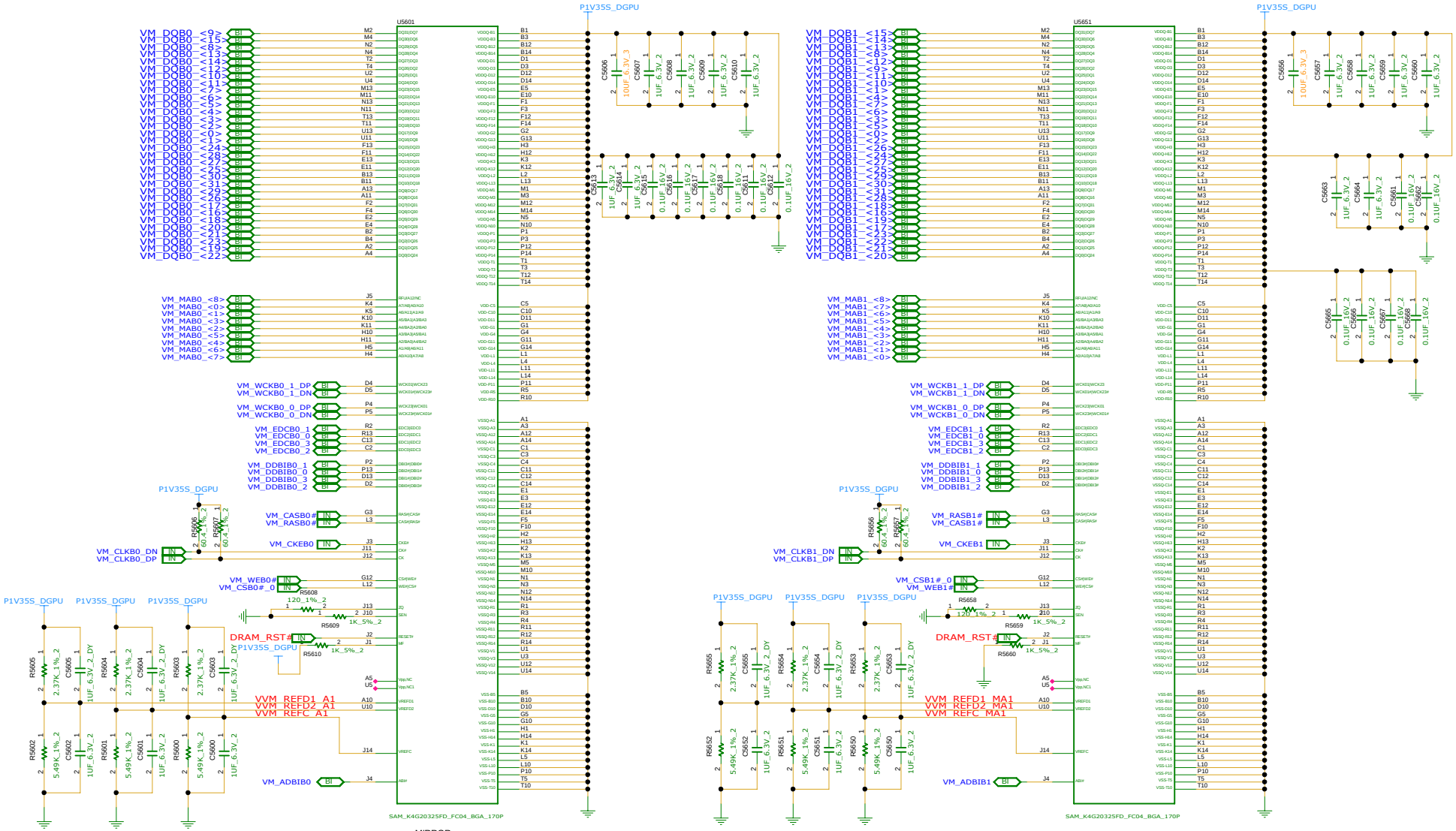

INVENTEC

TITLE: MODEL,PROJECT,FUNCTION
VRAM-2

SIZE	CODE	DOC.NUMBER	REV
C	CS	1310xxxxx-0-0	X01

CHANGE by XXX DATE 21-OCT-2002 SHEET 72 of 72